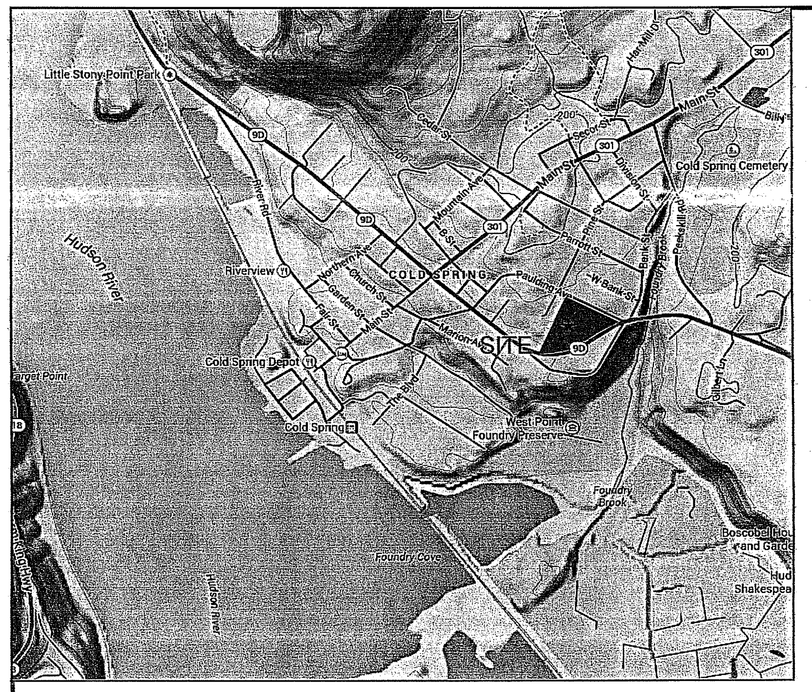

LOCATION MAP
NTS

OWNER:
BUTTERFIELD REALTY LLC.
3102 RT 9 SUITE 2A
COLD SPRING, NY 10516
P:845 809 5969

CONSTRUCTION MANAGER:
UNICORN CONTRACTING CORP.
3102 RT 9 SUITE 2A
COLD SPRING, NY 10516
P:845 809 5969

CIVIL ENGINEER:
SITE DESIGN CONSULTANTS
251-F UNDERHILL AVENUE
YORKTOWN HEIGHTS, NY 10598
P: 914 962 4488

ARCHITECT:
THE SULLIVAN ARCHITECTURAL GROUP
11226 POST ROAD
FAIRFIELD , CT 06824
P: 203 254 8680

LANDSCAPE ARCHITECT:
BLADES & GOVEN LANDSCAPE ARCHITECTS
60 THORPE STREET
FAIRFIELD, CT 06824
P:203 254 8530

COPYRIGHT © 2012 BY SITE DESIGN CONSULTANTS, ALL RIGHTS RESERVED

BUTTERFIELD REDEVELOPMENT PROJECT
3102 ROUTE 9D
COLD SPRING, NY

PUTNAM COUNTY DEPARTMENT OF HEALTH
DIVISION OF ENVIRONMENTAL HEALTH SERVICES
These plans for Potable water main & Sanitary Sewer main extensions are hereby approved pursuant to Part 5 of the New York State Sanitary Code, Article 17 of the New York State Environmental Conservation Law and Article 8 of the Putnam County Sanitary Code, subject to the provisions of the Letter of Approval issued this date.
Director of Public Health
By: Robert Morris PE
Title: Director of EHS
Division of Environmental Health
4-27-15

VILLAGE OF COLD SPRING
PUTNAM COUNTY, NEW YORK
April 27, 2015

LIST OF DRAWINGS

SHEET NUMBER	DRAWING TITLE
G-1	NOTES
G-2	EROSION & SEDIMENT CONTROL NOTES
E-1	EASEMENT PLAN
C-101	SITE/ SUBDIVISION PLAN
C-102	EXISTING CONDITIONS & DEMOLITION PLAN
C-103	EROSION & SEDIMENT CONTROL PLAN
C-104	GRADING PLAN
C-105	UTILITY PLAN
C-106	GRADING & UTILITY PLAN
C-107	~~NYSDOT PERMIT & M.P.T PLAN~~
C-108	~~NYSDOT HDD BORING PLAN~~
L-401	~~LANDSCAPE PLAN~~
L-402	~~SIGHT LIGHTING PLAN~~
L-403	~~SITE LIGHTING INFORMATION~~
C-301	DRIVEWAY PROFILES
C-302	UTILITY PROFILES
C-303	STORM PROFILES
C-501	EROSION & SEDIMENT CONTROL DETAILS
C-502	SITE DETAILS
C-503	WATER UTILITY DETAILS
C-504	STORM-SANITARY DETAILS
C-505	CRYSTAL STREAM TECH. DETAILS
C-506	STORMWATER MANAGEMENT DETAILS
C-507	RAINWATER HARVESTING DETAILS
C-508	~~RETAINING WALL DETAILS~~

APPROVED BY RESOLUTION OF THE VILLAGE OF COLD SPRING PLANNING BOARD

Barney Molloy, Chairman | Date | Resolution No.

PREPARED BY:
Site Design Consultants
Civil Engineers • Land Planners
251-F Underhill Avenue, Yorktown Heights, NY 10598
(914) 962-4488 - Fax: (914) 962-7386
www.SiteDesignConsultants.com

F:\2014\14-25 BUTTERFIELD REDEVELOPMENT\ENGINEERING\CAD\C3D-14-25 BUTTERFIELD REDEVELOPMENT\14-25 SITE PLAN REV 4.DWG

NOTE: UNAUTHORIZED ALTERATIONS OR ADDITIONS TO THIS DRAWING IS A VIOLATION OF SECTION 7209 (2) OF THE NEW YORK STATE EDUCATION LAW.

GENERAL NOTES:
1. THE ENGINEER WHOSE SEAL APPEARS HEREON IF NOT RETAINED FOR SUPERVISION OF CONSTRUCTION, IS NOT RESPONSIBLE FOR CONSTRUCTION AND THEREFORE ASSUMES NO RESPONSIBILITY FOR CONSTRUCTION PRACTICES, PROCEDURES, AND RESULTS THEREFROM.
2. THE ENGINEER SHALL NOT BE HELD RESPONSIBLE OR HELD ACCOUNTABLE FOR THE INTEGRITY OF ANY STRUCTURES CONSTRUCTED OR UNDER CONSTRUCTION PRIOR TO THE APPROVAL OF THE PLANS.
3. THE VILLAGE ENGINEER'S OFFICE AND WATER DISTRICT OFFICE IS TO BE NOTIFIED 24 HOURS BEFORE COMMENCING SITE CONSTRUCTION OR WATER MAIN CONNECTION.
4. ALL WORK IS TO BE IN ACCORDANCE WITH THE VILLAGE CODE OF PRACTICE AND SPECIFICATIONS.
5. ALL CONDITIONS, LOCATIONS, AND DIMENSIONS SHALL BE FIELD VERIFIED AND THE ENGINEER SHALL BE IMMEDIATELY NOTIFIED OF ANY DISCREPANCIES.
6. ALL CHANGES MADE TO THE PLANS SHALL BE APPROVED BY THE ENGINEER WHOSE SEAL APPEARS ON THESE DRAWINGS. ANY SUCH CHANGES SHALL BE FILED AS AMENDMENTS TO THE ORIGINAL BUILDING PERMIT.
7. ALL WRITTEN DIMENSIONS ON THE DRAWINGS SHALL TAKE PRECEDENCE OVER ANY SCALED DIMENSIONS.
8. IT IS THE CONTRACTOR'S RESPONSIBILITY TO CALL IN A "CODE 753" PRIOR TO CONSTRUCTION OF UNDERGROUND UTILITY LOCATIONS.
9. SUBSTRUCTURES AND THEIR ENCROACHMENTS BELOW GRADE, IF ANY, ARE NOT SHOWN.
10. ANY PROPOSED ELECTRIC AND/OR TELEPHONE SERVICE LINES ARE TO BE PLACED UNDERGROUND.
11. THE DESIGN ENGINEER DISCLAIMS ANY LIABILITY FOR DAMAGE OR LOSS INCURRED DURING OR AFTER CONSTRUCTION.
12. ALL CONDITIONS, LOCATIONS AND DIMENSIONS SHALL BE FIELD VERIFIED BY THE CONTRACTOR AND THE OWNER/ENGINEER NOTIFIED IN WRITING OF ANY DISCREPANCIES PRIOR TO THE START OF WORK. THE OWNER/ENGINEER WILL EVALUATE THE SITUATION AND MODIFY THE PLAN AS NECESSARY.

CONTRACTOR RESPONSIBILITIES:

1. ALL WORK ON THE PROJECT SHALL BE PERFORMED IN A WORKMAN LIKE MANNER AND SHALL BE IN ACCORDANCE WITH THE STANDARDS OF THE INDUSTRY. THE OWNER WILL BE THE SOLE JUDGE OF THE ACCEPTABILITY OF THE WORK. MATERIALS AND WORK DEEMED UNACCEPTABLE WILL BE REMOVED AND REDONE AT THE SOLE COST AND RESPONSIBILITY OF THE CONTRACTOR.
2. THE CONTRACTOR SHALL BE RESPONSIBLE TO PROTECT HIS WORK AND WILL BE HELD RESPONSIBLE FOR CONSEQUENTIAL DAMAGES DUE TO HIS ACTIVITIES. THE CONTRACTOR SHALL BE RESPONSIBLE TO THE OWNER FOR THE ACTS AND OMISSIONS OF HIS EMPLOYEE, AND THEIR AGENTS AND EMPLOYEES, AND ANY OTHER PERSONS PERFORMING ANY THE WORK UNDER A SEPARATE CONTRACT WITH THE CONTRACTOR.
3. IT IS THE CONTRACTOR'S RESPONSIBILITY TO PROPERLY SHORE EXISTING UTILITIES IF REQUIRED BY CONSTRUCTION.
4. IT SHALL BE THE CONTRACTOR'S RESPONSIBILITY TO NOTIFY THE THE VILLAGE ENGINEER IN ADVANCE OF HIS WORK OR AS THE INSPECTOR DEEMS APPROPRIATE.
5. ALL CONDITIONS, LOCATIONS AND DIMENSIONS SHALL BE FIELD VERIFIED BY THE CONTRACTOR AND THE OWNER/ENGINEER NOTIFIED IN WRITING OF ANY DISCREPANCIES PRIOR TO THE START OF WORK. THE OWNER/ENGINEER WILL EVALUATE THE SITUATION AND MODIFY THE PLAN AS NECESSARY.
6. ALL CHANGES MADE TO THIS PLAN SHALL BE APPROVED BY THE ENGINEER WHOSE SEAL APPEARS ON THESE DRAWINGS. ANY UNAUTHORIZED ALTERATION OR ADDITIONS TO THIS DRAWING IS A VIOLATION OF SECTION 7209 (2) OF THE NEW YORK STATE EDUCATION LAW.
7. THE CONTRACTOR SHALL SUPERVISE AND DIRECT THE WORK USING HIS BEST SKILL AND ATTENTION. HE SHALL BE SOLELY RESPONSIBLE FOR ALL CONSTRUCTION MEANS, METHODS, TECHNIQUES, SEQUENCES, AND PROCEDURES AND FOR COORDINATING ALL PORTIONS OF THE WORK UNDER THIS CONTRACT.
8. THE CONTRACTOR SHALL BE RESPONSIBLE TO THE OWNER FOR THE ACTS AND OMISSIONS OF HIS EMPLOYEES, SUBCONTRACTORS, AND THEIR AGENTS AND EMPLOYEES, AND ANY OTHER PERSONS PERFORMING ANY OF THE WORK UNDER A CONTRACT WITH THE CONTRACTOR.
9. THE CONTRACTOR SHALL VERIFY ALL SUBSTRUCTURES ENCOUNTERED DURING CONSTRUCTION.
10. THE CONTRACTOR SHALL SECURE & PAY FOR A BUILDERS RISK POLICY TO COVER THE PERIOD OF CONSTRUCTION. THE ENGINEER & OWNER SHALL BE NAMED AS ADDITIONAL INSURED. ALL CONTRACTORS EMPLOYED AT THE SITE SHALL BE COVERED BY WORKMAN'S COMPENSATION.

GENERAL CONSTRUCTION NOTES:

1. THE CONTRACTOR SHALL REQUEST A BENCH MARK FROM THE SURVEYOR IN THE SAME DATUM AS THE DESIGN PLANS.
2. FINISHED GRADES SHALL BE OF SUCH ELEVATION THAT THE GROUND WILL SLOPE AWAY FROM BUILDINGS IN ALL DIRECTIONS.
3. CONSTRUCTION ACTIVITY SHALL BE LIMITED FROM 8:00 A.M. TO 6 P.M., AND NO CONSTRUCTION ACTIVITY SHALL OCCUR ON SUNDAYS OR LEGAL NEW YORK STATE HOLIDAYS. WHERE BLASTING IS NECESSARY, IT SHALL OCCUR FROM MONDAY THROUGH FRIDAY BETWEEN THE HOURS OF 8:00 A.M. AND 6:00 P.M. NO BLASTING SHALL OCCUR ON HOLIDAYS, SATURDAY OR SUNDAY. ALL BLASTING SHALL BE COMPLETED IN ACCORDANCE WITH ALL PERMITS ISSUED BY THE VILLAGE OF COLD SPRING AND OTHER REGULATING AGENCIES. ALL PRE-BLASTING PROCEDURES SHALL BE FOLLOWED INCLUDING SURVEYS OF STRUCTURES AND PREPARATION OF A PRE-BLASTING PLAN. BLASTING LEVELS SHALL BE MONITORED TO ASSURE COMPLIANCE WITH THE VILLAGE CODE. THE CONTRACTOR SHALL COMPLY WITH THE BLASTING MITIGATION PLAN PREPARED FOR THIS PROJECT.
4. ANY SOIL THAT IS UNSUITABLE FOR DEVELOPMENT OF BUILDINGS OR ROADWAYS SHALL BE REMOVED FROM AREAS TO BE DEVELOPED AND SHALL BE DISPOSED OF WITHIN THE SITE IN NEW EMBANKMENTS WHERE STRUCTURAL LOADING, I.E. A BUILDING OR ROADWAY, WILL NOT TAKE PLACE. WHEN CONSTRUCTION IS PROPOSED TO OCCUR IN SPECIFIC AREAS WHERE SOILS ARE OF QUESTIONABLE SUITABILITY, THE OWNER SHALL RETAIN A SOILS ENGINEERTO EVALUATEAND PREPARE A DESIGN FOR THE CONDITION.
5. NO TOPSOIL SHALL BE REMOVED FROM THE SITE, UNLESS DESIRED BY THE OWNER.
6. ROCK CUT STABILITY IS TO BE FIELD VERIFIED BY GEOTECHNICAL ENGINEER AND SHALL BE MODIFIED IF REQUIRED.
7. NO CRUSHING/PROCESSING IS PERMITTED ON THE SITE WITHOUT PRIOR APPROVAL BY THE VILLAGE OF COLD SPRING PLANNING BOARD.
8. ALL DEMOLITION DEBRIS SHALL BE REMOVED FROM THE SITE AND DISPOSED OF IN ACCORDANCE WITH NYS ICR 56, AND OTHER FEDERAL, STATE, OR LOCAL STANDARDS. THE CONTRACTOR SHALL OBTAIN AND ADHERE TO THE REQUIREMENTS OF NECESSARY PERMITS. IF NECESSARY THE REMOVAL SHALL BE DONE BY A CONTRACTOR LICENSED TO REMOVE AND DISPOSE OF VARIOUS REGULATED MATERIALS SUCH AS ASBESTOS, TANKS, MATERIALS CONTAINING LEAD, ETC...
9. NYSDOT REQUIREMENTS: ALL WORK WITHIN THE NYSDOT R.O.W. REQUIRES A UTILITY AND /OR NON-UTILITY WORK PERMIT AND THE CONTRACTOR IS SUBJECT TO THE CONDITIONS STATED WITHIN THE PERMIT.

GENERAL STORM DRAINAGE & UTILITY NOTES

1. ALL UTILITIES, INCLUDING ELECTRIC LINES, TELEPHONE, WATER, SANITARY SEWER LINES, AND STORM SEWER LINES SHALL BE LOCATED UNDERGROUND AND SHALL BE INSTALLED IN ACCORDANCE WITH THE REQUIREMENTS OF THE VILLAGE OF COLD SPRING AND THE UTILITY COMPANIES HAVING JURISDICTION.
2. LOCATION OF GAS AND WATER VALVES, ELECTRIC AND TELEPHONE POLES ARE TO BE DETERMINED BY PROPER AUTHORITIES AND APPROVED, AS TO LOCATION.
3. EACH BUILDING CONSTRUCTED HEREON SHALL BE OF SUCH AN ELEVATION THAT THE GROUND WILL SLOPE AWAY FROM IT IN ALL DIRECTIONS. IN THE EVENT THAT THIS IS NOT FEASIBLE, THE CONTRACTOR SHALL INSTALL TYPICAL YARD DRAINS AS REQUIRED AND CONNECT THEM TO THE STORM DRAINAGE SYSTEM OR AS DIRECTED BY THE PROJECT ENGINEER.
4. ROOF LEADERS AND FOOTING DRAINS SHALL EMPTY INTO THE STORM DRAINAGE SYSTEM OR DISCHARGE DIRECTLY TO STORMWATER MANAGEMENT SYSTEMS IF GRADES PERMIT. ALL ROOF AND FOOTING DRAINS WILL BE SLOPED TO HAVE POSITIVE PITCH. UNDER NO CIRCUMSTANCES SHALL THE DISCHARGE OF GROUND WATER OR STORM WATER, EITHER BY GRAVITY OR BY PUMPING, BE DISCHARGED TO ANY SANITARY SEWER SYSTEM.
5. ANY REVISIONS AND/OR ADDITIONS TO THE ROAD STORM DRAINAGE SYSTEMS CURRENTLY SHOWN ON THE PLANS WHICH ARE DEEMED NECESSARY DURING CONSTRUCTION MUST BE MADE BY THE CONTRACTOR AS REQUIRED BY THE VILLAGE AND SHALL BE SHOWN ON THE AS-BUILT DRAWINGS.
6. STORM DRAIN PIPING TO BE HIGH DENSITY POLYETHYLENE AS SHOWN ON THE CONSTRUCTION DRAWINGS. MINIMUM COVER TO BE 2' UNLESS OTHERWISE NOTED.
7. INTERCEPTOR DRAINS ARE TO BE INSTALLED WHERE REQUIRED BY THE VILLAGE OR PROJECT ENGINEER DURING ROAD CONSTRUCTION.
8. ALL EXISTING UNDERGROUND DRAINS ENCOUNTERED DURING CONSTRUCTION OF PROPOSED ROADS ARE TO BE CONNECTED TO PROPOSED DRAINAGE IMPROVEMENTS. CONNECTIONS TO BE APPROVED BY THE VILLAGE ENGINEER.
9. PRIOR TO FINAL APPROVAL AND OPERATION OF DRAINAGE SYSTEM, CONTRACTOR SHALL CLEAR ALL ACCUMULATED SEDIMENT AND/OR DEBRIS FROM DRAINAGE STRUCTURES, MANHOLES, CULVERTS, OUTLETS AND DRAIN INLETS. ENGINEER SHALL BE NOTIFIED FOR FINAL INSPECTION.
10. ALL STRUCTURES SHALL BE SET ONE INCH BELOW TOP COURSE OF PAVEMENT.
11. STREET OPENING PERMIT FROM THE VILLAGE OF COLD SPRING D.P.W. MAY BE REQUIRED FOR INSTALLATIONS IN PUBLIC ROADS.

WATERMAIN NOTES

I. DISTRIBUTION SYSTEM - WATERMAIN

A. GENERAL

THE CONTRACTOR SHALL PERFORM THE NECESSARY EXCAVATION, BACKFILLING, CLEARING, GRUBBING, SHEETING, SHORING, DO ALL SHAPING OF TRENCHES, PUMPING AND BAILING, LAYING AND JOINING OF ALL PIPES, PROTECT AND SUPPORT EXISTING STRUCTURES AND REPAIR THEM, IF DAMAGED, AND ALL ELSE NECESSARY TO COMPLETE THE WORK.

THE CONTRACTOR SHALL FURNISH ALL MATERIALS, EQUIPMENT, LABOR, AND TOOLS NECESSARY TO COMPLETE THE WORK IN A SAFE, NEAT, AND WORKMANLIKE MANNER.

B. SITE AND ACCESS CLEARING (WITHIN EASEMENTS)

THE CONTRACTOR SHALL CONFINE ALL CLEARING OPERATIONS TO WITHIN THE IMMEDIATE AREAS THAT ARE ESSENTIAL FOR CONSTRUCTION OF THE WORK.

C. STOCKPILING OF SUITABLE BACKFILL MATERIAL

THE CONTRACTOR SHALL BE PREPARED WHEN EXCAVATING THE TRENCH TO SEPARATE SUITABLE BACKFILL MATERIAL FROM UNSUITABLE MATERIAL FOR USE AS BACKFILL ADJACENT TO THE PIPE.

D. PROTECTION OF EXISTING STRUCTURES AND UTILITIES

SPECIAL PRECAUTIONS SHALL BE TAKEN BY THE CONTRACTOR TO PROTECT OVERHEAD POWER LINES, WATERMAINS, GAS MAINS, ELECTRIC AND TELEPHONE CONDUITS, STORM AND SANITARY SEWERS, CULVERTS, BUILDINGS AND OTHER EXISTING STRUCTURES IN AND NEAR THE EXCAVATION. IN ALL CASES, WHETHER UNDERGROUND STRUCTURES HAVE OR HAVE NOT BEEN DELINEATED, THE VILLAGE ENGINEER, WATER SUPERINTENDENT, OR AUTHORIZED REPRESENTATIVE ACCEPTS NO RESPONSIBILITY FOR THEIR LOCATION. "UNDERGROUND UTILITIES" LOCATES EXISTING UNDERGROUND UTILITIES FREE OF CHARGE. THE PHONE NUMBER IS 1-800-962-7962.

GUTTERS, SEWERS, DRAINS AND DITCHES SHALL BE KEPT OPEN AT ALL TIMES FOR SURFACE DRAINAGE. NO DAMMING OR PONDING OF WATER IN GUTTERS OR OTHER WATERWAYS WILL BE PERMITTED EXCEPT WHERE STREAM CROSSINGS ARE NECESSARY AND THEN ONLY TO AN EXTENT WHICH THE VILLAGE ENGINEER, WATER SUPERINTENDENT, OR AUTHORIZED REPRESENTATIVE SHALL CONSIDER NECESSARY. THE CONTRACTOR SHALL NOT DIRECT ANY FLOW OF WATER ACROSS OR OVER PAVEMENTS EXCEPT THROUGH APPROVED PIPES OR PROPERLY CONSTRUCTED TROUGHS OF SUCH SIZES AND LENGTHS AS MAY BE REQUIRED, AND PLACE THE SAME AS DIRECTED. THE GRADING IN THE VICINITY OF TRENCHES SHALL BE CONTROLLED SO THAT THE GROUND SURFACE IS PROPERLY PITCHED TO PREVENT WATER RUNNING IN THE TRENCHING. THE CONTRACTOR SHALL NOT COMMENCE OPERATIONS INVOLVING ANY PUBLIC UTILITY BEFORE HAVING GIVEN WRITTEN NOTICE TO THE COMPANY OR OWNER, OR ITS AGENTS, AND SHALL COOPERATE WITH THE COMPANY'S OR OWNER'S FORCES IN PROTECTING AND PREVENTING DAMAGE TO THE PROPERTY.

THE CONTRACTOR WILL, AT HIS OWN EXPENSE, BE RESPONSIBLE FOR DIRECT OR INDIRECT DAMAGE THAT MAY BE DONE TO ANY UTILITY OR STRUCTURE IN THE PROSECUTION OF HIS WORK. THE LIABILITY OF THE CONTRACTOR IS ABSOLUTE AND IS NOT DEPENDENT UPON ANY QUESTIONS OF NEGLIGENCE ON HIS PART OR ON THE PART OF HIS AGENT, OR EMPLOYEES, AND THE NEGLECT OF THE VILLAGE ENGINEER, WATER SUPERINTENDENT, OR AUTHORIZED REPRESENTATIVE TO DIRECT THE CONTRACTOR TO TAKE ANY PARTICULAR PRECAUTION OR TO REFRAIN FROM DOING SUCH DAMAGE.

SHOULD THE POSITION OF ANY PIPE, CONDUIT, POLE OR OTHER STRUCTURES, ABOVE OR BELOW THE GROUND, BE SUCH AS TO REQUIRE ITS REMOVAL, REALIGNMENT, OR CHANGE DUE TO WORK TO BE DONE, REALIGNMENT OR CHANGE WILL BE DONE BY OR UNDER SUPERVISION OF THE OWNER OF THE OBSTRUCTIONS. THE CONTRACTOR SHALL UNCOVER AND SUSTAIN THE STRUCTURES, AFTER SUCH REALIGNMENT OR CHANGE.

THE CONTRACTOR SHALL NOT INTERFERE WITH ANY PERSONS, OR WITH THE OWNER IN PROTECTING, REMOVING, CHANGING OR REPLACING THEIR PIPES, CONDUITS, POLES OR OTHER STRUCTURES; BUT HE SHALL SUFFER SAID PERSONS OR THE OWNER TO TAKE ALL SUCH MEASURES AS THEY MAY DEEM NECESSARY OR ADVISABLE FOR THE PURPOSE AFORESAID, AND THE CONTRACTOR SHALL THEREBY BE IN NO WAY RELIEVED OF ANY OF HIS RESPONSIBILITIES.

THE CONTRACTOR SHALL MAKE ALL NECESSARY ARRANGEMENTS WITH THE OWNER OF THE RESPECTIVE UTILITY PRIOR TO RELOCATION OR INTERRUPTION OF SERVICE. ALL WORK NECESSARY FOR THE RELOCATION SHALL BE PERFORMED BY THE CONTRACTOR, OR BY THE OWNER AT THE OWNER'S OPTION, AND TO THE SATISFACTION OF THE OWNER. WHERE SERVICE IS INTERRUPTED, THE CONTRACTOR SHALL COOPERATE IN RESTORING SERVICE PROMPTLY. ALL CHARGES FOR DAMAGES DONE TO UTILITIES SHALL BE PAID BY THE CONTRACTOR.

E. CONSTRUCTION OF ROAD RIGHT-OF-WAY

CONSTRUCTION IN THE ROAD RIGHT-OF-WAY SHALL AT ALL TIMES BE PERFORMED WITH MINIMUM DISTURBANCE TO TRAFFIC WITH SUFFICIENT BARRICADES AND DIRECTION. DETOURS CAN BE INSTITUTED WITH APPROVAL OF THE VILLAGE ENGINEER, WATER SUPERINTENDENT, OR AUTHORIZED REPRESENTATIVE, OR STATE, COUNTY, OR LOCAL AUTHORITIES. PAVEMENT SHALL BE CUT PRIOR TO REMOVAL. HOLES AND SETTLEMENTS IN THE TRENCHES SHALL BE IMMEDIATELY FILLED TO THE ORIGINAL GRADE ELEVATION WITH THE SPECIFIED MATERIALS.

F. EXCAVATION AND PREPARATION OF TRENCH

THE CONTRACTOR SHALL PROCEED WITH CAUTION IN THE EXCAVATION AND PREPARATION OF THE TRENCH SO THAT THE EXACT LOCATION OF UNDERGROUND STRUCTURES, BOTH KNOWN AND UNKNOWN, MAY BE DETERMINED. THE TRENCH SHALL BE EXCAVATED SO THAT THE PIPE CAN BE LAID TO THE ALIGNMENT AND DEPTH REQUIRED. MINIMUM DEPTH OF COVER FROM SURFACE OF GROUND TO TOP OF PIPE BARREL SHALL BE FOUR FEET (4'). NO TRENCH SHALL BE EXCAVATED MORE THAN FIVE HUNDRED LINEAL FEET (500 LF) IN ADVANCE OF PIPE LAYING UNLESS AUTHORIZED BY THE VILLAGE ENGINEER, WATER SUPERINTENDENT, OR AUTHORIZED REPRESENTATIVE. THE TRENCH SHALL BE SO BRACED AND DRAINED THAT THE WORKMEN MAY WORK THEREIN SAFELY AND EFFICIENTLY. IT IS ESSENTIAL THAT THE DISCHARGE OF THE TRENCH DEWATERING PUMPS BE CONDUCTED TO NATURAL DRAINAGE CHANNELS OR DRAINS, AS IN ACCORDANCE WITH OSHA REQUIREMENTS.

THE WIDTH OF THE TRENCH SHALL BE OF ADEQUATE SIZE TO PERMIT THE PIPE TO BE LAID AND JOINTED PROPERLY, BUT SHALL NOT EXCEED THE SUM OF TWENTY-FOUR INCHES(24") PLUS THE PIPE OUTSIDE DIAMETER; AND THE BACKFILL TO BE PLACED AND COMPACTED AS SPECIFIED.

LEDGE ROCK, BOULDERS AND LARGE STONES SHALL BE REMOVED TO PROVIDE A CLEARANCE OF AT LEAST SIX INCHES (6") BELOW AND ON EACH SIDE OF ALL PIPES AND FITTINGS.

THE TRENCH SHALL BE EXCAVATED TO THE DEPTH REQUIRED SO AS TO PROVIDE A UNIFORM AND CONTINUOUS BEARING AND SUPPORT FOR THE PIPE ON SOLID AND UNDISTURBED GROUND AT EVERY POINT. WHERE THE BOTTOM OF THE TRENCH AT A SUBGRADE IS FOUND TO BE UNSTABLE, OR TO INCLUDE ASHES, CINDERS, ALL TYPES OF REFUSE, VEGETABLE OR OTHER ORGANIC MATERIAL OR LARGE PICES OF FRAGMENTS OR INORGANIC MATERIAL WHICH IN THE JUDGEMENT OF THE VILLAGE ENGINEER, WATER SUPERINTENDENT, OR AUTHORIZED REPRESENTATIVE SHOULD BE REMOVED, THE CONTRACTOR SHALL EXCAVATE AND REMOVE SUCH UNSUITABLE MATERIAL TO THE WIDTH AND DEPTH ORDERED BY THE VILLAGE ENGINEER, WATER SUPERINTENDENT, OR AUTHORIZED REPRESENTATIVE.

ANY PART OF THE BOTTOM OF THE TRENCH EXCAVATED BELOW THE SPECIFIED GRADE SHALL BE CORRECTED WITH APPROVED BEDDING MATERIAL, SUCH AS THOROUGHLY COMPACTED CRUSHED STONE, GRAVEL, OR CONCRETE AS DIRECTED BY THE VILLAGE ENGINEER, WATER SUPERINTENDENT, OR AUTHORIZED REPRESENTATIVE. THE FINISHED SUBGRADE SHALL BE PREPARED ACCURATELY BY MEANS OF HAND TOOLS.

GENERAL WATER MAIN NOTES:
1. ALL PROPOSED WATERMAIN MATERIALS, CONSTRUCTION AND INSTALLATION SHALL CONFORM TO ALL APPLICABLE RULES AND REGULATIONS OF CHAPTER 130 OF THE VILLAGE OF COLD SPRING WATER DEPARTMENT AND THE PUTNAM COUNTY HEALTH DEPARTMENT STANDARDS AND SPECIFICATIONS.
2. THE RECORDS OF THE VILLAGE OF COLD SPRING INDICATE THAT THERE IS ADEQUATE WATER PRESSURE AND CAPACITY AS REQURIED TO SERVE THIS PROJECT.
3. ALL BACKFLOW PREVENTION DEVICES ASSOCIATED WITH THE FIRE AND DOMESTIC SERVICES FOR EACH SERVICE CONNECTION SHALL BE LOCATED INTERNAL TO THE BUILDING AND SHALL REQUIRE SEPARATE APPROVAL BY THE PUTNAM COUNTY DEPARTMENT OF HEALTH.
4. ALL FIRE AND DOMESTIC SERVICE CONNECTIONS FROM THE PROPOSED WATER MAIN SHALL BE INSTALLED WITH WET TAPS AFTER THE CONTRACTOR HAS INSTALLED THE MAIN AND IT HAS BEEN APPROVED BY THE VILLAGE OF COLD SPRING WATER DEPARTMENT AND THE PUTNAM COUNTY DEPARTMENT OF HEALTH. ALL SERVICE CONNECTIONS SHALL BE METERED.
5. THE CONTRACTOR IS ADVISED THAT BEFORE HE CONNECTS TO THE EXISTING WATER SYSTEM, HE MUST ADVISE AND COORDINATE HIS OPERATIONS WITH THE VILLAGE OF COLD SPRING WATER DEPARTMENT'S SUPERINTENDENT. MEANS AND METHODS USED TO CONNECT TO THE EXISTING SERVICE SHALL BE APPROVED BY THE VILLAGE AND SHALL INCLUDE BUT NOT BE LIMITED TO WET TAPS OR OTHERWISE.
6. THE CONTRACTOR IS TO MAINTAIN CONSTANT FLOW AND PRESSURE IN ALL WATER MAINS AT ALL TIMES. IF THE NEED SHOULD ARISE THAT WATER SERVICE IS TO BE INTERRUPTED FOR A SHORT PERIOD, IT MUST BE COORDINATED WITH AND APPROVED BY THE ENGINEER AND THE VILLAGE OF COLD SPRING SUPERINTENDENT OF WATER.
7. WATER MAINS CROSSING HOUSE SEWERS, STORM SEWERS OR SANITARY SEWERS SHALL BE LAID TO PROVIDE A VERTICAL SEPARATION OF A MINIMUM OF 18" BETWEEN THE BOTTOM OF WATER MAIN AND TOP OF SEWER.
8. WATER MAINS PASSING UNDER HOUSE SEWERS, IN ADDITION, SHALL BE PROTECTED BY PROVIDING A VERTICAL SEPARATION OF 18" MINIMUM FROM THE BOTTOM OF THE SEWER TO THE TOP OF THE WATER MAIN AND ADEQUATE STRUCTURAL SUPPORT FOR THE SEWER TO PREVENT EXCESSIVE DEFLECTION OF THE JOINTS AND THE SEWER SETTLING AND BREAKING THE WATER MAIN. IN ADDITION THE LENGTH OF WATER PIPE IS TO BE CENTERED AT THE POINT OF CROSSING SO THAT THE JOINTS WILL BE EQUIDISTANT AND AS FAR AS POSSIBLE FROM THE SEWER. NO WATER MAIN SHALL PASS THROUGH OR COME IN CONTACT WITH ANY PART OF A SEWER OR SEWER MANHOLE.
9. THE COVER OVER THE TOP OF THE WATER MAIN SHALL BE A MINIMUM OF 4 FEET TO A MAXIMUM OF 5.5 FT.
10. WATER MAINS SHALL BE CLASS 52 DUCTILE IRON PIPES (DIP) TYTON JOINT TYPE AND FITTINGS SHALL BE FACTORY CEMENT LINED CLASS 52. ALL FITTINGS SHALL HAVE MECHANICAL JOINTS AND SHALL BE PRESSURE RATED AT 250 PSI. ALL NECESSARY JOINT MATERIALS SHALL BE FURNISHED. WATER MAINS SHALL BE INSTALLED IN ACCORDANCE WITH AWWA STANDARDS, LATEST REVISION.
11. ALL GATE VALVES SHALL BE MUELLER RESILIENT WEDGE (TURN LEFT OPEN) TYPE AND SHALL MEET AWWA STANDARDS, LATEST REVISION.
12. ALL SERVICE CONNECTIONS AND SMALL DIAMETER EXTENSIONS SHALL CONFORM TO THE LATEST EDITION OF AWWA C-151.
13. IF PIPE BENDS EXCEED 4" PER PIPE JOINT FILLINGS SHALL BE USED INCLUDING RETAINER GLANDS AND CONCRETE THRUST BLOCKS OR RODS SHALL BE USED AT ALL LOCATIONS WHERE FITTINGS ARE NECESSARY.
14. INSTALLATION AND TESTING OF THE WATER MAIN SHALL BE INSPECTED BY THE VILLAGE OF COLD SPRING AND PUTNAM COUNTY DEPARTMENT OF HEALTH. THE CONTRACTOR SHALL PROVIDE THE HEALTH DEPARTMENT A MINIMUM 48 HOURS NOTICE PRIOR TO ANY PRESSURE/LEAKAGE TESTS AND/OR DISINFECTION AND BACTERIOLOGICAL TESTS PERFORMED ON THE PROPOSED WATER MAIN. THE RESULTS OF THE ABOVE TESTS MUST BE ACCEPTED BY THE PCDOH PRIOR TO USE OF THE MAIN.
15. ASBUILT DRAWINGS SHALL SHOW DIMENSIONS BETWEEN ALL VALVE TURNING NUTS AND FINISH GRADE.
16. INSTALLATION, DISINFECTION AND TESTING TO BE WITNESSED AND CERTIFIED BY A LICENSED PROFESSIONAL ENGINEER OR VILLAGE OF COLD SPRING ENGINEER AND THE PUTNAM COUNTY DEPARTMENT OF HEALTH.
17. ALL HYDRANTS AND VALVES SHALL BE AS MANUFACTURED BY THE MUELLER COMPANY.
18. THE FINAL LOCATIONS OF FIRE HYDRANTS AND SIAMESE CONNECTIONS SHALL BE DETERMINED BY AND COORDINATED WITH THE VILLAGE OF COLD SPRING FIRE DEPARTMENT.
19. IF, DURING CONSTRUCTION, IT IS FOUND THAT THE REQUIRED SEPARATION OF WATER MAINS, SANITARY SEWERS, STORM SEWERS, AND BUILDING SEWERS CANNOT BE MET, THE DEVELOPER OR HIS AUTHORIZED REPRESENTATIVE SHALL CONTACT THE PUTNAM COUNTY DEPARTMENT OF HEALTH. APPROVAL BY THE PCDOH IS REQUIRED PRIOR TO ANY FIELD CHANGES THAT WILL AFFECT MINIMUM WATER/SEWER SEPARATION DISTANCES.
20. ALL TYPES OF INSTALLED PIPE SHALL BE PRESSURE TESTED AND LEAKAGE TESTED IN ACCORDANCE WITH THE LATEST EDITION OF AWWA STANDARD C-600.
21. ALL NEW, CLEANED OR REPAIRED WATER MAINS SHALL BE DISINFECTED AND BACTERIOLOGICAL TESTING PERFORMED IN ACCORDANCE WITH THE LATEST EDITION OF AWWA STANDARD C-651-05 (EXCEPT FOR SECTION 4.4.2 WHICH IS NOT APPROVABLE). THE SPECIFICATIONS INCLUDE DETAILED PROCEDURES FOR THE ADEQUATE FLUSHING, DISINFECTION, AND MICRO- BIOLOGICAL TESTING OF ALL WATER MAINS.
22. ROAD OPENINGS SHALL BE DONE IN ACCORDANCE WITH CONDITIONS OF PERMIT, AND COORDINATED WITH THE VILLAGE OF COLD SPRING.

SANITARY SEWER NOTES:
1. ALL WORK TO BE DONE IN ACCORDANCE WITH THE CODE OF THE VILLAGE OF COLD SPRING AND THE REGULATIONS OF THE PUTNAM COUNTY DEPARTMENT OF HEALTH.
2. THERE ARE NO WATER SUPPLY WELLS WITHIN 25 FT OF THE PROPOSED SANITARY SEWER.
3. SANITARY SEWERS ARE TO BE OF 8" RING-TIGHT PVC PLASTIC PIPE ASTM CLASS SDR-35 (OR HEAVIER IF REQUIRED BY THE VILLAGE CONSULTING ENGINEER DUE TO LOADING CONDITIONS). ALL PIPE TO BE MANUFACTURED BY JOHN MANSVILLE OR EQUAL.
4. SANITARY MANHOLES/CLEANOUT MANHOLES SHALL BE PRECAST CONCRETE. ALL WORK SHALL BE MANUFACTURED IN ACCORDANCE WITH APPROVED STANDARDS AND SHALL BE SPACED A MAXIMUM DISTANCE OF 300' ON STRAIGHT RUNS AND INSTALLED AT EVERY CHANGE IN ALIGNMENT. MANHOLE POSITIONING SHALL BE AS TO PREVENT THE ENTRANCE OF SURFACE WATER DURING STORMS. MANHOLE RIMS ARE TO BE WATER TIGHT IN AREAS SUBJECT TO POSSIBLE FLOODING CONDITIONS.
5. ALL BUILDING LATERALS TO BE INSTALLED BY PLUMBERS, LICENSED IN THE VILLAGE OF COLD SPRING ACCORDING TO THE REQUIREMENTS OF THE VILLAGE OF COLD SPRING.
6. A 6" MINIMUM BEDDING OF 3/4" CRUSHED STONE IS TO BE PLACED UNDER ALL SEWER LINES AND ALONG THE SIDES UP TO THE TOP TO PROVIDE FIRM SUPPORT.
7. SANITARY SEWER CONSTRUCTION SHALL MEET ALL SEWER CONSTRUCTION SPECIFICATIONS FOR THE VILLAGE OF COLD SPRING.
8. THE VILLAGE ENGINEER SHALL BE NOTIFIED 48 HOURS PRIOR TO THE START OF ANY WORK.
9. THE SANITARY SEWER MAIN SHALL BE LAID AT A MINIMUM SLOPE OF 0.5%.
10. ALL SEWERS SHALL BE LAID AT LEAST 10 FT HORIZONTALLY FROM ANY EXISTING OR PROPOSED WATER MAIN. THE DISTANCE SHALL BE MEASURED EDGE TO EDGE. IN CASES WHERE IT IS IMPRACTICAL TO MAINTAIN A 10 FOOT SEPARATION, THE PUTNAM COUNTY DEPARTMENT OF HEALTH MAY ALLOW DEVIATION ON A CASE-BY-CASE BASIS, IF SUPPORTED BY DATA FROM THE DESIGN ENGINEER.
11. HEAVY-DUTY WHITE FITTINGS AS MANUFACTURED BY GPK PRODUCTS, INC. OR APPROVED EQUAL, SHALL BE USED FOR THE CONSTRUCTION OF THE PVC SEWER SYSTEM.
12. MANHOLE STEPS SHALL BE CAST IRON NEENAH NO. R-1981-0 OR CAMPBELL FOUNDRY NO. 2588-1 OR POLYPROPYLENE COATED STEEL (SEE SPECIFICATIONS) OR APPROVED EQUAL.
13. UNLESS OTHERWISE SPECIFIED, SANITARY SEWER MANHOLES SHALL HAVE THE LETTERS "SEWER" CAST ON THE COVER.

14. MANHOLE COVERS AND STRUCTURES SHALL MEET OR EXCEED A.S.T.M. AND O.S.H.A. REQUIREMENTS AND MUST BE RATED FOR H-20 VEHICLE LOADING. MANHOLES MUST BE MIN. 48" DIAMETER.
15. ALL SANITARY STRUCTURES SHALL RECEIVE 2 MIL COATS OF BITUMINOUS MATERIAL "INERTOL NO. 49" KOPPERS SUPPER SERVICE BLACK OR APPROVED EQUAL, APPLIED IN ACCORDANCE WITH MANUFACTURE'S SPECIFICATIONS.
16. 0-RING JOINTS TO CONFORM TO A.S.T.M. DESIGNATION C-443 LATEST REVISION. JOINTS TO BE MORTARED INSIDE AND OUT USING NON-SHRINKING MORTAR.
17. PRE-CAST MANHOLE SECTIONS TO BE IN ACCORDANCE WITH "PRE-CAST REINFORCED CONCRETE MANHOLE SECTIONS" A.S.T.M. DESIGNATION C-478, LATEST REVISION, MINIMUM COMPRESSIVE STRENGTH TO BE 4000 P.S.I.
18. WHERE SEWER MAIN IS TO BE INSTALLED 10' DEEP OR GREATER, PVC SDR-26 SHALL BE USED.
19. WHEN SEWER IS TO BE INSTALLED IN FILL MATERIAL, THE SUPPORTING FILL IS TO BE COMPACTED TO MINIMUM STANDARD PROCTOR DENSITY OF 95%, AND SHALL BE CERTIFIED TO THE VILLAGE.
20. WATER MAINS CROSSING HOUSE SEWERS, STORM SEWERS OR SANITARY SEWERS SHALL BE LAID TO PROVIDE A VERTICAL SEPARATION OF A MINIMUM OF 18" BETWEEN THE BOTTOM OF WATER MAIN AND TOP OF SEWER. IN ADDITION, ADEQUATE STRUCTURAL SUPPORT SHALL BE PROVIDED FOR THE SEWER TO PREVENT EXCESSIVE DEFLECTION OF THE JOINTS AND THE SEWER SETTLING AND BREAKING THE WATER MAIN. IN ADDITION THE LENGTH OF WATER PIPE IS TO BE CENTERED AT THE POINT OF CROSSING SO THAT THE JOINTS WILL BE EQUIDISTANT AND AS FAR AS POSSIBLE FROM THE SEWER.
21. NO WATER MAIN SHALL PASS THROUGH OR COME IN CONTACT WITH ANY PART OF A SEWER OR SEWER MANHOLE.
22. MANHOLES AND SANITARY SEWER LINES SHALL BE TESTED TO CONFORM WITH PUTNAM COUNTY DEPARTMENT OF HEALTH RULES AND REGULATIONS IN THAT THE INFILTRATION / EXFILTRATION SHALL NOT EXCEED ONE HUNDRED (100) GALLONS/INCH DIAMETER OF PIPE/MILE/DAY.
23. INFILTRATION, EXFILTRATION AND VISUAL TESTS BY MEANS OF LIGHT FLASHING BETWEEN MANHOLES SHALL BE AS PER REQUIREMENTS OF THE VILLAGE ENGINEER. TESTING OF THE MANHOLES WITH THE PIPELINE SHALL NOT BE PERMITTED. MANHOLES AND SANITARY SEWER LINES SHALL BE TREATED INDEPENDENTLY OF EACH OTHER. NO TESTS SHALL BE MADE UNTIL TWO WEEKS AFTER BACKFILLING OF SANITARY SEWERS OR LONGER IF CONDITIONS, IN THE OPINION OF THE VILLAGE ENGINEER, WARRANT IT.
24. AIR AND VACUUM TESTING MAY BE PERFORMED ON THE SANITARY SEWER LINES AND MANHOLES IN LIEU OF HYDROSTATIC TESTING. AIR TESTING OF THE SANITARY SEWER LINES SHALL BE IN ACCORDANCE WITH ASTM F1417-92 "STANDARD TEST METHOD FOR INSTALLATION ACCEPTANCE OF PLASTIC GRAVITY SEWER LINES USING LOW-PRESSURE AIR." VACUUM TESTING OF THE MANHOLES SHALL BE IN ACCORDANCE WITH THE LATEST RELEASE OF ATTACHMENT B "VACUUM TESTING OF MANHOLES" FROM THE PUTNAM COUNTY DEPARTMENT OF HEALTH.
25. SANITARY SEWER SERVICE LINES SHALL BE TESTED IN CONJUNCTION WITH THE SEWER MAINS TO THE PROPERTY LINE OR EASEMENT LINE IN ACCORDANCE WITH THE LATEST PUTNAM COUNTY DEPARTMENT OF HEALTH RULES AND REGULATIONS.

SANITARY SEWER TESTING:

Procedure and method of testing - The test length intervals and type of leakage test shall be approved by the Owner's field representative and Site Engineer. In the case of sewers laid on steep grades, the length of line to be tested by exfiltration at any one time may be limited by the maximum allowable internal pressure on the pipe and joints at the lower end of the line. Depending on field conditions and/or desire of the Contractor, the following tests for leakage may be employed:

1. Hydrostatic Test:

The test period, wherein the measurements are taken shall not be less than four (4) hours in either type of test. The total leakage of any section tested shall not exceed the rate of 100 gallons per mile of pipe per 24 hours per inch of nominal pipe diameter. For purposes of determining the maximum allowable leakage, manholes shall be considered as sections of pipe and shall be tested at a level above the highest joint prior to the concrete/rim connection.

1.1. Infiltration Test -

This test may be used only when ground water levels are at least two (2) feet above the top of the pipe for the entire length of the section to be tested during the entire period of the test. Ground water levels may be measured in an open trench or in standpipes previously placed in backfilled trenches during the backfilling operations. When standpipes are installed in the backfill for ground water measurement, the lower ends of these shall be satisfactorily embedded in a mass of crushed stone or gravel to maintain free percolation and drainage. Infiltration through joints shall be measured by using a watertight weir or any other approved device for volumetric measurement installed at the lower end of the section under test.

1.2. Exfiltration Test -

This test consists of filling the pipe with water to provide a head of at least two (2) feet above the top of the pipe or two (2) feet above ground water, whichever is higher, at the highest point of the pipe line under test, and then measuring the loss of water from the line by the amount which must be added to maintain the original level. In this test the line must remain filled with water for at least twenty-four (24) hours prior to the taking of measurements. Exfiltration shall be measured by the drop of water level in a closed-end standpipe or in one of the sewer manholes available for convenient measuring. When a standpipe and plug arrangement is used in the upper manhole of a line under test, there must be some positive method of releasing entrapped air in the sewer prior to taking measurements.

2. Vacuum Testing of Manholes -

This test method is only applicable to precast concrete manholes. All lifting holes and exterior joints shall be filled and pointed with an approved non-shrinking mortar. No standing water shall be allowed in the manhole excavation which may affect the accuracy of the test. All pipes and other openings into the manhole shall be suitably plugged in such a manner as to prevent displacement of the plugs while the vacuum is drawn. Installation and operation of the vacuum equipment and indicating devices shall be in accordance with equipment specifications and instructions provided by the manufacturer.

The test head may be placed in the cone section of the manhole. The rim-cone joint is not usually tested. A vacuum of 10 inches of mercury shall be drawn. The time for the vacuum to drop to 9 inches of mercury shall be recorded. Acceptance for 4 ft diameter manholes shall be defined as when the time to drop to 9 inches of mercury meets or exceeds the following:

Manhole Depth	Time to Drop 1" Hg
10 ft of Less	60 sec.
10 ft to 15 ft	75 sec.
15 ft to 25 ft.	90 sec.

For manholes 5 ft in diameter, add 15 seconds; for manholes 6 ft in diameter, add 30 seconds to the time requirements for four foot diameter manholes indicated above.

3. Low-Pressure Air Test of Pipe Lines -

Plug all openings in the test section. Add air until the internal pressure of the line is raised to approximately 4.0 psi. After this pressure is reached, allow the pressure to stabilize. The pressure will normally drop as the air temperature stabilizes. This usually takes 2 to 5 min. Depending on the pipe size. The pressure may be reduced to 3.5 psi before starting the test.

When the pressure has stabilized and is at or above the starting test pressure of 3.5 psi, start the test. If the pressure drops more than 1.0 psi during the test time, the line is presumed to have failed the test. If a 1.0-psi drop does not occur within the test time, the line has passed the test. Test times are for a 1.0 psi pressure drop from 3.5 to 2.5 psi. If the section of line to be tested includes more than one pipe size, calculate the test time for each size and add the test times to arrive at the total test time for the section. Minimum test times for various pipe sizes in inches are as follows:

SIZE (INCHES)	TIME (MIN./100 FT.)
UP TO 8	1.2
10	1.5
12	1.8

SAVATREE ASSESMENT NOTES:

BEECH TREE PROTECTION NOTES:
(BASED ON *SAVATREE ASSESSMENT NOTES* AS MODIFIED TO BE PROJECT SPECIFIC.)

BASED ON MY ASSESSMENT OF THE TREE AND MY REVIEW OF THE CURRENT SITE PLAN, I RECOMMEND THE FOLLOWING ACTIONS BE TAKEN:

1. PRIOR TO ANY EXCAVATION, THE LIMIT OF DISTURBANCE (LOD) ADJACENT TO THE TREE SHOULD BE EXCAVATED WITH AN AIRSPADE®. ROOTS GREATER THAN 1" IN DIAMETER SHOULD BE PRUNED BY HAND AT THE LOD BY AN ISA CERTIFIED ARBORIST.
   A. THE ARBORIST MUST ASSESS WHETHER THE NUMBER AND SIZE OF ROOTS TO BE REMOVED WILL IMPACT THE STRUCTURAL STABILITY OF THE TREE. THIS IS A CONCERN DUE TO THE SIZE OF THE TREE AND ITS PROXIMITY TO THE LOD. THE SIDE OF MOST CONCERN IS THE WESTERN, WHERE THE PROPOSED CORNER OF BUILDING 5 IS 27.5 FEET FROM THE BASE OF THE TREE. IN ORDER TO EXCAVATE FOR THIS CORNER, THE LOD WILL BE 5-10 FEET CLOSER TO THE TREE THAN THE BUILDING CORNER.
2. A TREE PROTECTION ZONE (TPZ) SHALL BE ESTABLISHED AND ENFORCED TO PREVENT SOIL COMPACTION, GRADE CHANGE, AND ROOT DAMAGE. PROVIDE A 6' TALL CHAIN LINK FENCE TO OUTLINE THE TPZ. THE APPROXIMATE OUTLINE FOR THE PROPOSED TPZ IS SHOWN ON SHEETS C-102 AND C-103.
3. ONGOING (EVERY OTHER MONTH) MONITORING OF THE TREE PROTECTION IMPLEMENTATION AND TREE CONDITION AND HEALTH BY A QUALIFIED ARBORIST THROUGHOUT CONSTRUCTION ACTIVITY SHOULD OCCUR. RECOMMENDATIONS FOR SUPPLEMENTAL FERTILIZATION OR BIOSTIMULANT APPLICATION, SUPPLEMENTAL IRRIGATION, ADDITIONAL PRUNING, ETC., MAY BE MADE AT THIS TIME.
4. AFTER ROOT PRUNING IS PERFORMED (ASSUMING TREE IS RETAINED ON-SITE), THE FOLLOWING TREATMENTS SHOULD BE MADE AS SOON AS FEASIBLE:
   A. APPLY PLANT GROWTH REGULATOR (WITH THE ACTIVE INGREDIENT PACLOBUTRAZOL). THIS PRODUCT SHOULD REDUCE TOP END GROWTH WHICH RESULTS IN THE TREE UTILIZING INCREASED ENERGY FOR ROOT GROWTH AND MAINTENANCE OF ITS EXISTING CANOPY.
   I. THIS APPLICATION CANNOT BE MADE WHEN THE GROUND IS FROZEN. THEREFORE IF ROOT PRUNING AND CONSTRUCTION BEGINS IN THE WINTER, THIS APPLICATION SHOULD BE MADE IN EARLY SPRING AFTER GROUND THAW.
   B. INSTALL A 2-4" LAYER OF ORGANIC MULCH OVER AS MUCH OF THE ROOT ZONE AS PRACTICAL. THIS WILL HELP TO RETAIN MOISTURE, MAINTAIN SOIL TEMPERATURES, AND REDUCE/ALLEVIATE SOLID COMPACTION.
5. THE FOLLOWING PRUNING MUST OCCUR PRIOR TO OPENING THE SITE TO THE PUBLIC:
   A. CROWN CLEAN ALL DEADWOOD 1" OR GREATER FOR SAFETY, INCLUDING LARGE LIMB SHOWN IN PHOTO 5.

BLASTING MITIGATION NOTES:

- All blasting will be conducted in compliance with New York State requirements (Title 12 of the New York Code of Rules and Regulations [12 NYCRR Part 39]) for the possession, handling, storage, and transportation of explosives.
- Blasting will be conducted by licensed, qualified and insured blasting contractors, who are certified in New York State. The blasting contractor will adhere to all insurance needs of the company that is contracting them.
- Pre-blasting inspections will be conducted for all off-site structures located within a predetermined radius or 500 feet of the blasting/excavation area, if authorized by the property owners. These inspections will include photo documentation and/or video documentation.
- Prior to blasting, an analysis will be completed by the contractor to determine the size, placement, and timing of blasting charges. This analysis will be provided in a written blasting plan.
- This blasting plan will be available for review by the Town Engineer or designee, and will include the blasting layout, size of blast, timing of charges, and quantity of material to be extracted.
- Seismographic equipment with decibel meters will be placed on the property line between the location of the blast and the nearest residences of structures. The results of the monitoring equipment will be promptly reviewed following each blast.
- The quantity of explosives will be limited to the amount necessary to fracture the rock without endangering persons or property. Before firing, all blasts will be covered with a suitable protective device to prevent escape of broken material.
- Blasting operations will be limited to the hours between 8:00 am and 10:00 pm, Monday through Friday. Blasting will not be conducted between the hours of 10:00 pm and 8:00 am weekdays or anytime on Saturday, Sunday or any holiday.
- The minimum required amount of explosives will be used in all blasting operations. Charges will be staggered to avoid the creation of high energy blasts.
- When blasting is to occur within 500 feet of existing off-site structures, the contractor will conduct test blasting, if necessary, prior to any other blasting to determine appropriate on-site blasting techniques.
- Blasting will be conducted so that the resulting ground vibrations at nearby structures does not exceed the standard industry measurement of a Peak Particle Velocity of 2.0 inches per second and the airborne noise does not exceed 130 dBA.
- Sufficient surficial converge of the blast area will be provided to prevent damage from air blast and vibration.
- Notifications will be made to the Village Clerk, Police, and Sheriff's Department and nearby off-site residences/structures within 500 feet of the blasting area twice prior to blasting. Initially not less then 72-hours nor more than 30 days prior to the blast, notifying residents/property owners of the approximate anticipated day and time of blasting. The second notification would be not less than 24 hours and no more than 72 hours prior to the blast, to notify the exact time of blast (within 1 hour).
- Notification would be accomplished through mailings and by telephone calls (if feasible) to the property owners. The mailings documenting the blasting schedule would be sent through the US Postal Service to the appropriate officials and all residents/property owners within 500 feet of the blasting area. Phone calls to these residents/property owners would be made within the specified time frames noted above to provide additional notification of the pending blasting. The mailed notifications will include information regarding the blasting locations and the anticipated time during which the blasting would occur.
- When blasting activities are to be conducted, warning flags or other means will be used at a reasonable distance along roadways to give proper warning to the general public.
- For each blast, an air horn will be sounded in q manner to give proper warning before the firing of the blast, and to give and all clear at the conclusion of each blast.

Preblast Surveys

The purpose of a preblast survey is to determine the condition of a dwelling or structure and document any preblast damage or other physical factors that could reasonably be affected by blasting. The survey can also be used to document that damage occurred after the survey was conducted.

Many structures develop hairline cracks over time. These can be caused by a number of environmental factors including humidity and temperature changes, settlement from consolidation, freeze-thaw cycles, variations in ground moisture and wind. Structural problems may result from constructing a building on improperly compacted fill, improperly sized footings or other structural elements, and not being built to Building Code requirements. Inadequate drainage around a building can also cause settling and cracking. These types of cracks will be noted during the preblast survey.

Any resident or property owner within 500 feet of the blast area may request a preblast survey. The request must be made in writing, directly to the Building Inspector who shall promptly notify the applicant. The survey will include visual inspection of foundations and exposed walls, as well as photographic and/or video documentation of conditions prior to blasting. In locations where existing wells will also be monitored, the condition of the well, depth of casing and depth of water elevation will also be measured and recorded (see discussion of wells below).
The blasting contractor will promptly conduct a preblast survey (at his expense) and prepare a written report of the survey. Copies of the report shall be provided to the Building Inspector and to the person requesting the survey.

Wells

Blasting typically does not result in damage of existing foundations or wells if the work is completed according to current industry standards. Local variations in subsurface conditions or geology may occasionally result in unanticipated impacts to existing structures and wells. The use of proper blasting techniques and mitigation measures will minimize the potential effects of blasting on nearby residences and businesses.
As described above, preblast surveys of residences and structures within 500 feet of the blasting locations will include documentation of the existing condition of the well onsite, if there is one. This includes the year of installation, depth, depth to water, depth of the pump, water yield, and length of casing, if known. Residents or property owners concerned about potential impacts to their well may elect to have their well monitored during the proposed period of blasting. Monitoring would involve the installation of an electronic water level data logger. Monitoring of water levels would begin a minimum of two (2) weeks prior to blasting and end two (2) weeks after the final blasting event. The results of the monitoring would be provided to the Village Building Inspector as documentation regarding water levels in individual wells both pre-and post-blasting.

GENERAL NOTES
1. The Engineer shall not be held responsible or held accountable for the integrity of any structures constructed or under construction prior to the approval of the plans.
2. All conditions, locations, and dimensions shall be field verified and the Engineer shall be immediately notified of any discrepancies.
3. All written dimensions on the drawings shall take precedence over any scaled dimensions.
4. Contractor to verify all substructures encountered during construction.
5. The Contractor shall supervise and direct the work using his best skill and attention. He shall be solely responsible for all construction means, methods, techniques, sequences, and procedures and for coordinating all portions of the work under the contract.
6. The Contractor shall be responsible to the owner for the acts and omissions of his employees, subcontractors, and their agents and employees, and any other persons performing any of the work under a contract with the Contractor.
7. The Design Engineer disclaims any liability for damage or loss incurred during or after construction.
8. Survey and topographical information shown hereon prepared by surveyor: BADEY & WATSON SURVEYING & ENGINEERING

PUTNAM COUNTY DEPARTMENT OF HEALTH BASIC REQUIREMENT NOTES:
1. Unauthorized modifications made to this drawing after the of Putnam County Healthy Department approval voids said approval.
2. The conditions noted on Putnam County Department of Health Letter of Approval are an integral part of this approval and compliance is required.
3. This plan is approved for sewage treatment and/or water supply only, and all other permits and/or approvals are the responsibility of the permittee.
4. The Putnam County Health Department approval expires five (5) years from the date on the approval stamp and is required to be renewed on or before the expiration date. The approval is revocable for cause or may be amended or modified when considered necessary by the Department.

DUCTILE IRON PIPE WATER TESTING PROCEDURES

TESTS ON PRESSURE PIPING FOR TRANSPORT OF WATER

A. Hydrostatic Pressure Test
Hydrostatic testing shall be performed in accordance with the revision of AWWA C600, Section 5.2, "Hydrostatic Testing".

1. Test pressure shall be as scheduled or, where no pressure is scheduled, shall be 150 psi, or 1.25 times the static operating pressure, whichever is higher.
2. Test pressure shall be held on the piping for a period of at least 2 hours; unless a longer period is requested by the Engineer.
3. The test medium shall be water.

B. Hydrostatic Leakage Test

1. The leakage test shall be conducted concurrently with the pressure test.
2. The rate of leakage shall be determined at 15-minute intervals by means of volumetric measurement of the makeup water added to maintain the test pressure. The test shall proceed until the rate of leakage has stabilized or is decreasing below an allowable value, for three consecutive 15-minute intervals. After this, the test pressure shall be maintained for at least another 15 minutes.
   a. At the completion of the test, the pressure shall be released at the furthermost point from the point of application.
3. All exposed piping shall be examined during the test and all leaks, defective material or joints shall be repaired or replaced before repeating the tests.
4. The allowable leakage will be determined by the following formula.

$$Q = \frac{LD\sqrt{P}}{148{,}000}$$

Where:
Q = quantity of makeup water, in gallons per hour
L = length of pipe tested, in feet
D = nominal diameter of the pipe, in inches
P = average test pressure during the hydrostatic test, in pounds per square inch (gauge)

5. Regardless of the above allowables, any visible leaks shall be permanently stopped.
6. The test medium shall be water.

C. Disinfection
Prior to placing the water main into service, the new pipe shall be cleaned and disinfected in accordance with the latest revision of AWWA C651, Section 4.4.3, "The Continuous Feed Method". The "Tablet Method" will not be accepted.

1. All work under this section shall be performed in the presence of the Design Engineer, and a representative of the public health authority having jurisdiction, as required.
2. Chlorination shall be scheduled such that sampling and flushing will be performed during normal daylight working hours. The contractor shall provide acceptable backflow prevention on all supply water to prevent any potential backflow contamination or cross connection.
3. Chlorination shall be by the use of a solution of water and liquid chlorine, calcium hypochlorite or sodium hypochlorite and the solution shall be contained in the pipe or structure as specified.
4. Prior to chlorination, all dirt and foreign matter shall be removed by a thorough cleaning and flushing of the pipeline or structure.
5. The chlorine solution shall be introduced to pipelines through corporation stops placed in the horizontal axis of the pipe, to structures by means of tubing extending directly into the structure, or other approved methods.
6. The application of the chlorine solution shall be by means of a controlled solution feed device. The rate of chlorine solution flow shall be in such proportion to the rate of water entering the pipe or structure that the resulting free chlorine residual shall be between 25 and 50 parts per million (PPM) or milligrams per liter (mg/l).
7. The chlorine treated water shall be retained in the pipe or structure at least 24 hours, unless otherwise directed. During the retention period, all valves and hydrants within the treated sections shall be operated.
8. The chlorine residual shall be not less than 10 PPM (or mg/l) at any point in the pipe or structure at the end of the 24-hour retention period.
9. When making repairs to, or when specified, structures and portions of pipelines shall be chlorinated by a concentrated chlorine solution containing not less than 200 PPM (mg/l) of free chlorine. The solution shall be applied with a brush or sprayed on the entire inner surface of the empty pipes or structures. The structures disinfected shall remain in contact with the strong chlorine solution for at least 30 minutes.
10. After the required retention of chlorinated water in the pipe or structures, they shall be thoroughly flushed until the replacement water shall, upon test, both chemically and bacteriological, be proven equal to water quality served by the public from the existing water supply system.
11. The disposal of chlorinated water from any pipe or structure shall be such that it will not cause damage to any vegetation, fish, or animal life.
12. The Contractor shall make all arrangements for the testing of water quality by an approved independent laboratory. Two acceptable bacteriological test, taken at least 24 hours apart, shall be collected from the new water main. At least 1 set of samples must be collected from every 1,000 LF of the new water main, plus one set from the end of the line and at least one set from each branch. The results for all tests shall be forwarded to the Design Engineer and the public health authority having jurisdiction.
13. All water quality requirements shall be fulfilled prior to the passage of any water through the new system to a public supply or the use of the new system.

PUTNAM COUNTY DEPARTMENT OF HEALTH
DIVISION OF ENVIRONMENTAL HEALTH SERVICES
These plans are hereby approved pursuant to Part 5 of the New York State Sanitary Code, Article 17 of the New York State Environmental Conservation Law and Article ___ of the Putnam County Sanitary Code, subject to the provisions of the Letter of Approval issued this date. See first sheet for signature.

NOTE: UNAUTHORIZED ALTERATIONS OR ADDITIONS TO THIS DRAWING IS A VIOLATION OF SECTION 7209.(2) OF THE NEW YORK STATE EDUCATION LAW.

Site Design Consultants
Civil Engineers • Land Planners
251-F Underhill Avenue, Yorktown Heights, NY 10598
(914) 962-4488 - Fax: (914) 962-7386
www.sitedesignconsultants.com

PROJECT # 14-25

Engineer: Joseph C. Riina, P.E. NYS Lic. No. 64431
STATE OF NEW YORK · JOSEPH CARLO RIINA · LICENSED PROFESSIONAL ENGINEER · 064431

Revisions:

No.	Date	Comments:
1	12-3-14	Revisions per comments from B&L
2	1-9-15	Revisions per comments from B&L
3	2-10-15	Revisions per comments from B&L
4	2-19-15	Parking Schedule
5	3-13-15	Revisions per NYSDOT
6	3-23-15	Revisions per comments from B&L
7	4-23-15	Revisions per comments from PCDOH
8	4-27-15	Revisions per comments from PCDOH meeting

SCALE: NTS
DRAWN BY: EL
DATE: 10/22/14

NOTES

SITE/SUBDIVISION PLAN
PREPARED FOR
Butterfield Redevelopment Project
1756 NYS ROUTE 9D
Village Of Cold Spring — Putnam County, New York

Sheet G-1

COPYRIGHT © 2012 BY SITE DESIGN CONSULTANTS, ALL RIGHTS RESERVED

F:\2014\14-25 BUTTERFIELD REDEVELOPMENT\ENGINEERING\CAD\C3D-14-25 BUTTERFIELD REDEVELOPMENT\14-25 DETAILS UPDATED.DWG

GENERAL EROSION CONTROL NOTES:

1. Contractor shall be responsible for compliance with all sediment and erosion control practices. The sediment and erosion control practices are to be installed prior to any major soil disturbances, and maintained until permanent protection is established. Road surface flows from the site should be dissipated with tracking pad or appropriate measures during adjacent road shoulder regrading. Contractor is responsible for the installation and maintenance of all soil erosion and sedimentation control devices throughout the course of construction. During construction the E&SC Monitor retained by the owner will provide inspections as per the requirements of the NYS DEC GP-0-10-00. The monitor will provide guidance to the Contractor where additional E&SC practices may need to be added or repairs/replacement of in-place practices are required. The Contractor shall adhere to and implement these suggested improvements.
2. Prior to commencement of work, an on-site pre-construction meeting will be held. This will be attended by the Project Owner, the Operator responsible for complying with the approved construction drawings including the E&SC Plan and Details, the Design Engineer, the Engineer or SWPPP Monitoring Professional responsible for E&SC monitoring during construction, Village representatives from the Engineering Consultant and Code Enforcement.
3. Catch basin inlet protection must be installed and operating at all times until tributary areas have been stabilized. When possible flows should be stabilized before reaching inlet protection structure. Timely maintenance of sediment control structures is the responsibility of the Contractor.
4. All structures shall be maintained in good working order at all times. The sediment level in all sediment traps shall be closely monitored and sediment removed promptly when maximum levels are reached or as ordered by the Engineer or SWPPP Monitoring. All sediment control structures shall be inspected on a regular basis, and after each heavy rain to insure proper operation as designed. An inspection schedule shall be set forth prior to the start of construction.
5. The locations and the installation times of the sediment capturing standards shall be as specified in these plans, as ordered by the Engineer or SWPPP Monitoring, and in accordance with the latest edition of the "New York Standards and Specifications for Erosion and Sediment Control" (NYSSESC).
6. All topsoil shall be placed in a stabilized stockpile for reuse on the site. All stockpile material required for final grading and stored on site shall be temporarily seeded and mulched within 7 days. Refer to soil stockpile details.
7. Any disturbed areas that will be left exposed more than 7 days and not subject to construction traffic, shall immediately receive temporary seeding. Mulch shall be used if the season prevents the establishment of a temporary cover. Disturbed areas shall not be limed and fertilized prior to temporary seeding.
8. All disturbed areas within 500 feet of an inhabited dwelling shall be wetted as necessary to provide dust control.
9. The contractor shall keep the roadways within the project clear of soil and debris and is responsible for any street cleaning necessary during the course of the project.
10. All sediment and erosion control measures shall be installed in accordance with current edition of NYSSESC.
11. All regraded areas must be stabilized appropriately prior to any rock blasting, cutting, and/or filling of soils. Special care should be taken during construction to insure stability during maintenance and integrity of control structures.
12. Any slopes graded at 3:1 or greater shall be stabilized with erosion blankets to be staked into place in accordance with the manufactures requirements. Erosion blankets may also be required at the discretion of Village officials, Engineer or SWPPP Monitoring. When stabilized blanket is utilized for channel stabilization, place all of the volume of seed mix prior to laying net, or as recommended by the manufacturer.
13. To prevent heavy construction equipment and trucks from tracking soil off-site, construct a pervious crushed stone pad. Locate and construct pads as detailed in these plans.
14. Contractor is responsible for controlling dust by sprinkling exposed soil areas periodically with water as required. Contractor to supply all equipment and water.
15. Contractor shall be responsible for construction inspections as per NYSDEC GP-0-10-001 and Village of Cold Spring Code.
16. Temporary Erosion and Sediment Control practices will remain in place until such time that the disturbed area for which such practice has achieved final stabilization. The Erosion and Sediment Control practices may not be removed until so depicted by the SWPPP Monitoring Professional or Village Representative.

CONTRACTOR CERTIFICATION STATEMENT

Certification Statement - All contractors and subcontractors as identified in a SWPPP, by the Owner or Operator, in accordance with Part III.A.5 of the SPDES General Permit for Stormwater Runoff from Construction Activity, GP-0-10-001, dated January 28, 2010, Page 10 of 40, shall sign a copy of the following Certification Statement before undertaking any construction activity at the Site identified in the SWPPP:

"I hereby certify that I understand and agree to comply with the terms and conditions of the SWPPP and agree to implement any corrective actions identified by the Qualified Inspector during a site inspection. I also understand that the Owner or Operator must comply with the terms and conditions of the New York State Pollutant Discharge Elimination System ("SPDES") General Permit for Stormwater Discharge from Construction Activities and that it is unlawful for any person to cause or contribute to a violation of water quality standards. Furthermore, I understand that certifying false, incorrect or inaccurate information is a violation of the referenced permit and the laws of the State of New York and could subject me to criminal, civil and/or administrative proceedings."

Individual Contractor: _____

Name and Title (please print): _____

Signature of Contractor: _____

Company / Contracting Firm: _____

Name of Company: _____

Address of Company: _____

Telephone Number / Cell Number: _____

Site Information: _____

Address of Site: _____

_____

Today's Date: _____

OWNER / OPERATOR CERTIFICATION

"I certify under penalty of law that this document and all attachments were prepared under my direction or supervision in accordance with a system designed to assure that qualified personnel properly gathered and evaluated the information submitted. Based on my inquiry of the person or persons who manage the system, or those persons directly responsible for gathering the information, the information submitted is, to the best of my knowledge and belief, true, accurate, and complete. Further, I hereby certify that the SWPPP meets all Federal, State, and local erosion and sediment control requirements. I am aware that false statements made herein are punishable as a Class A misdemeanor pursuant to Section 210.45 of the Penal Law."

Name (please print): _____

Title: _____

Date: _____

Address: _____

Phone: _____

E-mail: _____

Signature: _____

MAINTENANCE OF TEMPORARY EROSION AND SEDIMENT CONTROL STRUCTURES:

N.Y.S.D.E.C. GP-0-10-001 EXPOSURE RESTRICTIONS - States that any exposed earthwork shall be stabilized in accordance with the guidelines of this plan.

1. Trees and vegetation shall be protected at all times as shown on the detail drawing and as directed by the Engineer.
2. Care should be taken so as not to channel concentrated runoff through the areas of construction activity on the site.
3. Fill and site disturbances should not be created which causes water to pond off site or on adjacent properties.
4. Runoff from land disturbances shall not be discharged or have the potential to discharge off site without first being intercepted by a control structure, such as a sediment trap or silt fence. Sediment shall be removed before exceeding 50% of the retention structure's capacity.
5. For finished grading, adequate grade shall be provided so that water will not pond on lawns for more than 24 hours after rainfall, except in swale flow areas which may drain for as long as 48 hours after rainfall.
6. All swales and other areas of concentrated flow shall be properly stabilized with temporary control measures to prevent erosion and sediment travel. Surface flows over cut and fill areas shall be stabilized at all times.
7. All sites shall be stabilized with erosion control materials within 7 days of final grading.
8. Temporary sediment trapping devices shall be removed from the site within 30 days of final stabilization.

MAINTENANCE SCHEDULE:

	DAILY	WEEKLY	MONTHLY	AFTER RAINFALL	NECESSARY TO MAINTAIN FUNCTION	AFTER APPROVAL OF INSPECTOR
SILT FENCE	———	———	INSP.	INSP.	CLEAN/ REPLACE	REMOVE
STABILIZED CONST. ENTRANCE	CLEAN	———	———	———	REPLACE	REMOVE
INLET PROTECTION	———	INSP.	INSP.	CLEAN	REPLACE	REMOVE

MAINTENANCE OF PERMANENT CONTROL STRUCTURES DURING CONSTRUCTION:

The stormwater management system and outlet structure shall be inspected on a regular basis and after every rainfall event. Sediment build up shall be removed from the inlet protection regularly to insure detention capacity and proper drainage. Outlet structure shall be free of obstructions. All piping and drain inlets shall be free of obstruction. Any sediment build up shall be removed.

MAINTENANCE OF CONTROLS AFTER CONSTRUCTION:

Controls (including respective outlet structures) should be inspected periodically for the first few months after construction and on an annual basis thereafter. They should also be inspected after major storm events.

DEBRIS AND LITTER REMOVAL:

Twice a year, inspect outlet structure and drain inlets for accumulated debris. Also, remove any accumulations during each mowing operation.

STRUCTURAL REPAIR/REPLACEMENT:

Outlet structure must be inspected twice a year for evidence of structural damage and repaired immediately.

EROSION CONTROL:

Unstable areas tributary to the basin shall immediately be stabilized with vegetation or other appropriate erosion control measures.

SEDIMENT REMOVAL:

Sediment should be removed after it has reached a maximum depth of five inches above the stormwater management system floor.

TOPSOIL:

Existing topsoil will be removed and stored in piles sufficiently as to avoid mixing with other excavation. Stockpiles shall be surrounded by erosion control as outlined on these plans. The furnishing of new topsoil shall be of a better or equal to the following criteria (SS713.01 NYSDOT):

1. The pH of the material shall be 5.5 to 7.6.
2. The organic content shall not be less than 2% or more than 70%.
3. Gradation:

SIEVE SIZE	% PASSING BY WGT.
2 INCH	100
1 INCH	85 TO 100
1/4 INCH	65 TO 100
NO. 200 MESH	20 TO 80

PERMANENT VEGETATIVE COVER:

1. Site preparation:
   - 1.1. Install erosion control measures.
   - 1.2. Scarify compacted soil areas.
   - 1.3. Lime as required to ph 6.5.
   - 1.4. Fertilize with 10-6-4 4 lbs/1,000 S.F.
   - 1.5. Incorporate amendments into soil with disc harrow.
2. Seed mixtures for use on swales and cut and fill areas.

MIXTURE		LBS./ACRE
ALT. A	KENTUCKY BLUE GRASS	20
	CREEPING RED FESCUE	28
	RYE GRASS OR REDTOP	5
ALT. B	CREEPING RED FESCUE	20
	REDTOP	2
	TALL FESCUE/SMOOTH BLOOMGRASS	20

3. SEEDING
   - 3.1. Prepare seed bed by raking to remove stones, twigs, roots and other foreign material.
   - 3.2. Apply soil amendments and integrate into soil. Soil shall be scarified and de-compacted.
   - 3.3. Apply seed uniformly by cyclone seeder culti-packer or hydro-seeder at rate indicated.
   - 3.4. Stabilize seeded areas in drainage swales.
   - 3.5. Irrigate to fully saturate soil layer, but not to dislodge planting soil.
   - 3.6. Seed between April 1st and May 15th or August 15th and October 15th.
   - 3.7. Seeding may occur May 15th and August 15th if adequate irrigation is provided.

TEMPORARY VEGETATIVE COVER:

SITE PREPARATION:

1. Install erosion control measures.
2. Scarify areas of compacted soil.
3. Fertilize with 10-10-10 at 400/acre.
4. Lime as required to ph 6.5.

SEED SPECIES:

MIXTURE	LBS./ACRE
Rapidly germinating annual ryegrass (or approved equal)	20
Perennial ryegrass	20
Cereal oats	36

SEEDING:
Same as permanent vegetative cover

CONSTRUCTION SEQUENCE:

Recommended Sequence of Construction

Use of erosion and sediment control structures and practices are important for maintaining site stability under runoff and during daily construction activities. The Construction Sequence should be staged with erosion and sediment controls, as follows, with all controls in place and implemented prior to respective infrastructure construction. As construction proceeds, the controls should be monitored, maintained and replaced as needed. Additional controls may be required as needed to address unforeseen situations.

Refer to The Construction Drawings for all plans and details which relate to the Construction Sequence. This Sequence should be followed in conjunction with all Plans, Notes, and the Stormwater Pollution Prevention Plan. Prior to the commencement of work, the Owner and General Contractor shall read and understand the Sequence for Construction. The Sequence shall be discussed at the time of the Pre-construction Meeting.

During construction of the project, the Contractor is responsible to coordinate all required inspections with various agencies and the Project Engineer.

Construction Sequence

General Sequence: The general sequence applies to the start of all Phases of the project. The requirements in such shall be applied as appropriate in that phase and shall be assumed in place prior to the start of the work outlined in the sequence for each Phase. The phases are delineated on the E&SC Plan.

1. Prior to the beginning of any site work the major features of the construction must be field staked by a licensed surveyor. These include the building, limits of disturbance, utility lines, and Stormwater practices.
2. Cut and clear trees within the phase limits as necessary for the areas to be disturbed. Install tree protective measure at marked locations on E&SC Plan.
3. Install all temporary erosion control measures as shown on the Erosion and Sediment Control Plan for the project's immediate disturbance areas. This shall include, but not limited to silt fence, stabilized construction entrances, diversion swales, sediment traps, construction fence, etc.. This sequence must be followed to insure proper implementation of the Erosion and Sediment Control Plan (E&SC) and Stormwater Pollution Prevention Plan (SWPPP).
4. Prior to commencement of work, an on-site pre-construction meeting will be held. This will be attended by the Project Owner, the Operator responsible for complying with the approved construction drawings including the E&SC Plan and Details, the Design Engineer, the Engineer responsible for E&SC monitoring during construction, Village representatives from the Engineering Consultant and Code Enforcement.
5. Timbered trees and woodchips shall be temporarily stored in the stockpile and or staging area if necessary before being removed off-site. Woodchips may be used for mulch to stabilize disturbed areas. Woodchip mulch shall be applied at a minimum rate of 500 lbs. per 1000 SF (2" thick minimum).
6. Remove existing vegetative cover, cut and clear trees, grub, remove stumps and other surface features in the limit of construction only. Any disturbance that results from tree clearing and grubbing shall be immediately stabilized with woodchips mulch, hydro-mulch, or straw and seed. Timbered trees, wood chips, and stumps shall be removed off-site unless otherwise directed. As stated woodchips may be stockpiled for use as stabilizing ground cover. Demolish and/or remove existing features, i.e.: fence, concrete slab, asphalt etc., and dispose of or stockpile as required by the Owner. All construction debris shall be properly disposed of in accordance with all Federal, State, and Local requirements.

Standard Sequence Notes for All Phases

7. When grading the roadways, parking, and building pads for the Buildings begin moving the fill towards the location designated for each phase. Cut and fill of a certain phase shall meet the next phase boundary at a maximum slope of 2V:1H. For previous phases where grading is complete match to finish grade elevations. All compaction requirements shall be met within the fill sections. (This work shall include the commencement of the retaining walls around the proposed building construction.) Upon completion of the grading, temporary seed or hydro-mulch any embankments and install erosion control blankets where shown on the erosion and sediment control plan. During building and site construction, maintain and re-establish as required, erosion control and stabilization measures as required by the Site Plan and Details. Areas which are to remain undisturbed for more than 7 days shall be stabilized with temporary seeding or mulch.
8. A licensed surveyor must define the building, roadway, and parking locations. In addition the surveyor shall locate the utilities and stormwater management system.
9. Install or check condition of all temporary Erosion Control Measures as shown on the Erosion and Sediment Control Plan.
10. Begin preparation of the building site and excavation of the building foundation as well as construction of all retaining walls. Areas in which final grade is achieved shall be immediately stabilized with permanent vegetative cover. Permanent slopes of 3:1 or greater shall receive erosion blankets.
11. Begin construction of the foundation. Upon completion and after proper curing time is achieved, backfill the foundation and bring site to rough grade. Areas which are to remain undisturbed for more than 7 days shall be stabilized with temporary seeding or mulch.
12. Upon completion of each Phase the Contractor shall be required to stabilize disturbed soils in the event the disturbed area will remain not worked for greater than seven (7) days, at the direction of the Engineer of Record or permitting entity Inspector, and when significant precipitation is in the immediate forecast. All disturbed areas shall be temporarily stabilized with hydro-mulch or where appropriate woodchip. It is recommended that any grading that is at the finish stage will receive no further disturbance and that permanent stabilization such as topsoil, seed, mulching or blankets as per the Plan be installed. **The next phase cannot commence until these steps have been completed.**

The following phases are the general order for construction of the project and may be modified after approved by the supervising Engineer. The phasing is meant to minimize the amount of open disturbance. Under no circumstances shall multiple phases amounting to five (5) acres or greater be disturbed during the same period of time. In the event greater disturbance is necessary outside of the Phase lines shown on the Erosion and Sediment Control Plan, the Contractor shall coordinate with the Engineer of Record, and Municipality for an on-site meeting to discuss the alternative approach to the construction.

Protection of Beech Tree
Prior to any disturbance on the site, all protective measures for the 54" Beech tree shall be installed. No heavy equipment, excavation, or other work shall be performed in the protection zone that will in any damage the tree or root system. Any work to be done within this zone will follow the procedure outline in the Savatree tree assessment and protection plan located on sheet G-1. The contractor will be held solely responsible for any action which will result in damage to the tree.

Demolition and Site Preparation - The intent of this phase is to demolish and completely remove existing buildings, parking, utilities and other infrastructure and prepare the site for the new construction.

1. Once all erosion controls are in place begin demolition of the existing building and site infrastructure in preparation for new construction. All demolition debris shall be hauled off site and disposed of in accordance with all federal, state and local requirements.
2. The Surveyor shall stake-out the proposed access roads centerline, and buildings to be constructed as per the current phase.
3. Create access points by installing the stabilized construction entrances at the locations shown on the E&SC Plan as well as the staging area for the project trailer, employee vehicle parking, and construction vehicles and equipment as required. Establish areas to stockpile soil, materials, dumpsters and trees. The site safety fence, gate, and site signage shall be installed.

Construction of Buildings, Drives and Parking, Utility Infrastructure - The intent of this phase is to complete the construction of Buildings, the access driveway and parking for the site, and the landscape and hardscape included in the phase limits shown on the Erosion and Sediment Control Plan.

1. Implement the General Sequence notes 1 through 6 prior to continuing this phase.
2. Strip topsoil within the Phase I boundary and place excavated topsoil within the identified stockpile locations. Any soils so deemed by the Design or Monitoring Engineer shall be stockpiled for future use as landscaped area topsoil. Contractor shall take every precaution feasible to reduce the amount of disturbed/exposed soils during construction.
3. Construct and install the temporary sediment traps in the locations as deemed necessary by the monitoring engineer. Install the temporary filtered outlet. Any disturbance that will not be further disturbed within 7 days shall be immediately stabilized with woodchips, hydro-mulch, or straw and seed.
4. Begin establishing the site grades for the roadways, parking, and buildings based on survey stakeout.
5. Once rough grades have been established the surveyor shall stakeout the underground utilities. Begin installing the sanitary sewer and sanitary sewer service to the proximity of the buildings connection point. Upon completion move to the watermain. Backfill as installation is complete and stabilize the area. If trenches are to be left open, place excavated material on the up-slope sides of the trench and protect and stabilize if it is to remain open for an extended period of 7 days or more. Where grading is final permanently seed or hydro-mulch the area.
6. Watermain are tested and deemed acceptable, install the water service to within proximity of the proposed building locations.
7. Begin excavation for the building being built in the initial phase. This can be done simultaneously to step 8. **Refer to Notes 7 through 11 under the General Sequence.**
8. Stake-out and begin installation of Rainwater Harvesting, Pre-treatment, subsurface infiltration and detention chambers, and associated structures and piping within in the locations shown on the plan.
9. When the subsurface units are installed the upstream drainage structures shall be blocked so as to not allow sediment laden water from reaching the subsurface chambers.
10. Backfill as installation is complete and stabilize the area. If trenches are to be left open, place excavated material on the up-slope sides of the trench and protect and stabilize if it is to remain open for an extended period of 7 days or more.
11. Upon completion of the subsurface chambers, begin installation of proposed bypass structure, outlet structure. Install storm sewer piping, catch basins and manholes, working downstream to upstream. During the installation of catch basins, install inlet protection and water bar as per E&SC Plan to assure that sediment laden water will not enter the storm system. Once the final grade above the system is achieved place final topsoil cover, begin placement of seed mix and erosion control blanket, or hydro-mulch. Refer to the landscape plan for the seed mix requirements.
    Note: No stormwater is permitted to enter the infiltration system from the upstream conveyance system and shall be blocked until the completion and stabilization of all phases tributary to the basin. An area shall be considered to have achieved final stabilization when it has a minimum uniform 80% perennial vegetative cover or other permanent non-vegetative cover with a density sufficient to resist accelerated surface erosion and subsurface characteristics sufficient to resist sliding and other movements.
12. Complete construction of the building, and remaining retaining walls within phase limits. Utilities must be lain and completed before the construction of retaining walls.
13. Stake-out the location of all other underground utilities and utility structures within this phase. Begin excavation and install said utilities.
14. During the Final Phase of building construction, finish grade, topsoil, rake, and seed all areas as required. Where required or recommended, hydro-mulch or install erosion control blankets.
15. Install final vegetation including sod and landscaping. Refer to Landscape Plans for location and identification of ground cover and plantings. Clear site of debris and all unwanted materials. Disposal shall be in accordance with all Federal, State, and Local requirements.

Continuation of Building - The intent of this phase is to complete the construction of the Buildings not completed in the initial phase, and the associated landscape and hardscape included in the particular phase. Additionally, all utility connections.

1. The Surveyor shall stake-out the proposed building.
2. Implement the General Sequence notes 1 through 6 prior to continuing this phase.
3. Strip topsoil within the Phase I boundary and place excavated topsoil within the identified stockpile locations. Any soils so deemed by the Design or Monitoring Engineer shall be stockpiled for future use as landscaped area topsoil. Contractor shall take every precaution feasible to reduce the amount of disturbed/exposed soils during construction.
4. Begin excavation for the building foundation for the Building and adjacent areas. **Refer to Notes 7 through 11 under the General Sequence.**
5. Complete construction of the building, and remaining retaining walls within phase limits. Utilities must be lain and completed before the construction of retaining walls.
6. Upon completion of this Phase the Contractor shall be required to stabilize disturbed soils in the event the disturbed area will remain not worked for greater than seven (7) days, at the direction of the Engineer of Record or permitting entity Inspector, and when significant precipitation is in the immediate forecast. All disturbed areas shall be temporarily stabilized with hydro-mulch or where appropriate woodchip. It is recommended that any grading that is at the finish stage will receive no further disturbance and that permanent stabilization such as topsoil, seed, mulching or blankets as per the Plan be installed.
7. Install all utility connections.
8. During the Final Phase of building construction, finish grade, topsoil, rake, and seed all areas as required. Where required or recommended, hydro-mulch or install erosion control blankets.
9. Install final vegetation including sod and landscaping. Refer to Landscape Plans for location and identification of ground cover and plantings. Clear site of debris and all unwanted materials. Disposal shall be in accordance with all Federal, State, and Local requirements.

Roadway and Parking Area Completion:

10. Stake out and install curbing as per Plan. Once curbing is completed around catch basins, re-install inlet protection within catch basins. As curbing is complete, backfill with topsoil. Areas that are filled with topsoil are to be raked, seeded, and hay mulched.
11. Upon completion of the majority of the project infrastructure, install pavement binder course to the thickness and elevation as per the Construction Plans.

Final Site Stabilization and Completion of New Construction:

12. Upon completion of all Phases, the site shall be inspected by the SWPPP Monitoring Engineer and/or Village Inspector to determine completion of all work and permanent stabilization of the site. As each phase is at the completion stage install final asphalt surface.
13. Any areas deemed incomplete or not properly stabilized shall be done so to the satisfaction to the SWPPP Monitoring Engineer and Village Inspector.
14. Temporary Erosion and Sediment Control practices will remain in place until such time that the disturbed area for which such practice has achieved final stabilization. The Erosion and Sediment Control practices may not be removed until so directed by the SWPPP Monitoring Professional or Village Representative. The area where the sediment trap was located shall be filled, top soiled, seeded and mulched in accordance with the specifications within this plan.

Contact information during and after construction:

Paul Guilaro
Unicorn Contracting Corp.
3102 Rte 9 Suite 2A
Cold Spring, NY 10516
845-809-5969
15.

PUTNAM COUNTY DEPARTMENT OF HEALTH
DIVISION OF ENVIRONMENTAL HEALTH SERVICES

These plans are hereby approved pursuant to Part 5 of the New York State Sanitary Code, Article 17 of the New York State Environmental Conservation Law and Article 19 of the Putnam County Sanitary Code, subject to the provisions of the Letter of Approval issued this date. See first sheet for signature.

Site Design Consultants
Civil Engineers • Land Planners
251-F Underhill Avenue, Yorktown Heights, NY 10598
(914) 962-4488 - Fax: (914) 962-7386
www.sitedesignconsultants.com

COPYRIGHT © 2012 BY SITE DESIGN CONSULTANTS, ALL RIGHTS RESERVED

PROJECT # 14-25

STATE OF NEW YORK · JOSEPH CARLO RINA · LICENSED PROFESSIONAL ENGINEER

Engineer: Joseph Carlo Rina P.E.
NYS Lic. No. 085431

Revisions:

No.	Date	Comments:
1	12-2-14	Revisions per comments from B&L
2	1-6-15	Revisions per comments from B&L
3	2-10-15	Revisions per comments from B&L
4	2-10-15	Parking Schedule
5	3-13-15	Revisions per NYSDOT
6	4-13-15	Revisions per comments from B&L
7	4-23-15	Revisions per comments from PCDOH
8	4-23-15	Revisions per comments from PCDOH meeting

SCALE: NTS
DRAWN BY: EL
DATE: 10/22/14

E&SC NOTES

SITE/SUBDIVISION PLAN
PREPARED FOR:

Butterfield Redevelopment Project

1756 NYS ROUTE 9D
Village Of Cold Spring
Putnam County, New York

Sheet G-2

NOTE: UNAUTHORIZED ALTERATIONS OR ADDITIONS TO THIS DRAWING IS A VIOLATION OF SECTION 7209 (2) OF THE NEW YORK STATE EDUCATION LAW.

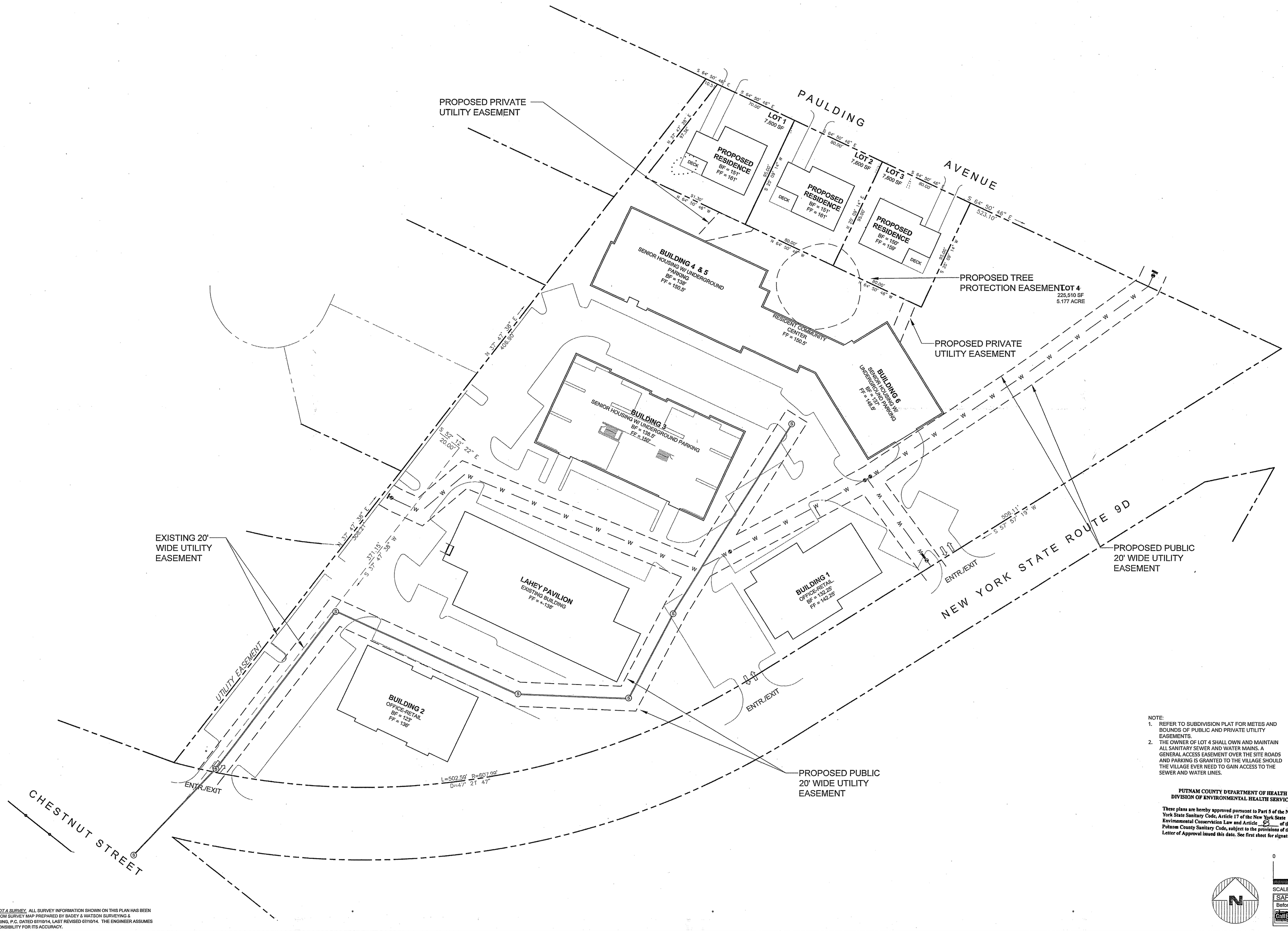

NOTE:
1. REFER TO SUBDIVISION PLAT FOR METES AND BOUNDS OF PUBLIC AND PRIVATE UTILITY EASEMENTS.
2. THE OWNER OF LOT 4 SHALL OWN AND MAINTAIN ALL SANITARY SEWER AND WATER MAINS. A GENERAL ACCESS EASEMENT OVER THE SITE ROADS AND PARKING IS GRANTED TO THE VILLAGE SHOULD THE VILLAGE EVER NEED TO GAIN ACCESS TO THE SEWER AND WATER LINES.

PUTNAM COUNTY DEPARTMENT OF HEALTH
DIVISION OF ENVIRONMENTAL HEALTH SERVICES

These plans are hereby approved pursuant to Part 5 of the New York State Sanitary Code, Article 17 of the New York State Environmental Conservation Law and Article 5 of the Putnam County Sanitary Code, subject to the provisions of the Letter of Approval issued this date. See first sheet for signature.

SAFE DIG
Before You Dig, Drill or Blast!
CALL US TOLL FREE 811 or 1-800-962-7962
Call811 247 Industrial Center Rutte 733 requests no less than two working days notice, but not more than ten calendar days.
www.digsafelynewyork.com

NOTE:
1. *THIS IS NOT A SURVEY.* ALL SURVEY INFORMATION SHOWN ON THIS PLAN HAS BEEN TAKEN FROM SURVEY MAP PREPARED BY BADEY & WATSON SURVEYING & ENGINEERING, P.C. DATED 07/10/14, LAST REVISED 07/10/14. THE ENGINEER ASSUMES NO RESPONSIBILITY FOR ITS ACCURACY.

NOTE: UNAUTHORIZED ALTERATIONS OR ADDITIONS TO THIS DRAWING IS A VIOLATION OF SECTION 7209 (2) OF THE NEW YORK STATE EDUCATION LAW.

Site Design Consultants
Civil Engineers • Land Planners
251-F Underhill Avenue, Yorktown Heights, NY 10598
(914) 962-4488 - Fax: (914) 962-7386
www.sitedesignconsultants.com

PROJECT # 14-25

COPYRIGHT © 2012 BY SITE DESIGN CONSULTANTS, ALL RIGHTS RESERVED

Engineer:
STATE OF NEW YORK · JOSEPH CARLINO MINA · 065437 · LICENSED PROFESSIONAL ENGINEER
Joseph Carlino, P.E.
NYS Lic. No. 065437

Revisions:

No.	Date	Comments:
1	12-3-14	Revisions per comments from B&I.
2	1-7-15	Revisions per comments from B&I.
3	2-10-15	Revisions per comments from B&I.
4	2-16-15	Parking Schedule
5	3-31-15	Revisions per NYSDOT.
6	4-13-15	Revisions per comments from B&I.
7	4-22-15	Revisions per comments from PCDOH.
8	4-22-15	Revisions per comments from PCDOH meeting.

SCALE: 1" = 30'
DRAWN BY: EL
DATE: 10/22/14

EASEMENT PLAN

SITE/SUBDIVISION PLAN
PREPARED FOR

Butterfield Redevelopment Project

1756 NYS ROUTE 9D

Village Of Cold Spring — Putnam County, New York

E-1

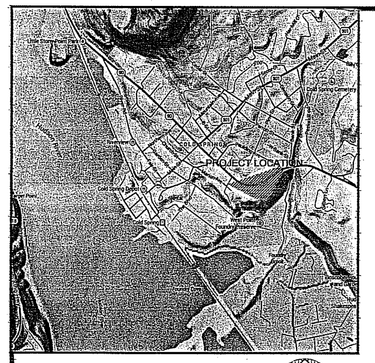

LOCATION MAP
NOT TO SCALE

SITE DATA:

OWNER / DEVELOPER:	BUTTERFIELD REALTY LLC 3102 ROUTE 9D COLD SPRING, NY 10516
PROJECT LOCATION:	1756 PAULDING AVENUE COLD SPRING, NEW YORK, 10516
EXISTING ZONE:	B-4A, MEDICAL AND HEALTH CARE FACILITY MIXED USED R-1, ONE FAMILY RESIDENCE DISTRICT
TOWN TAX MAP DATA:	SECTION 49.5, BLOCK 3, LOT 45
SITE AREA:	5.797 ACRES (252,517.32SF)
SEWAGE FACILITIES:	PUBLIC SEWERS
WATER FACILITIES:	PUBLIC WATER FACILITIES

PROJECT SUMMARY:

1. BUILDING 1, ***MUNICIPAL OFFICE BUILDING*** - 6,000 SF FOOTPRINT, WITH 15,000 SF TOTAL (FIRST FLOOR RETAIL NOT TO EXCEED 6,000SF)
2. BUILDING 2, ***RETAIL OFFICE BUILDING*** - 6,000 SF FOOTPRINT, WITH 16,000 SF TOTAL (FIRST FLOOR RETAIL NOT TO EXCEED 6,000SF)
3. BUILDINGS 3 - 6, ***SENIOR CONDOMINIUM*** - 55 UNITS \
4. LOTS 1,2, & 3 - THREE (3) SINGLE FAMILY HOMES

ZONING SCHEDULE: LOTS 1,2, &3

ZONING DISTRICT:	R-1, SINGLE FAMILY RESIDENTIAL				
DIMENSIONAL REGULATIONS:	REQUIRED	LOT 1 PROVIDED	LOT 2 PROVIDED	LOT 3 PROVIDED	VARIANCE REQUIRED
MINIMUM SIZE OF LOT:					
MINIMUM LOT AREA:	7,600 SF.	7,600 SF.	7,600 SF.	7,600 SF.	NONE
MINIMUM LOT WIDTH:	75 FT.	80 FT.	80 FT.	80 FT.	NONE
MINIMUM LOT DEPTH:	75 FT.	95 FT.	95 FT.	95 FT.	NONE
MINIMUM YARD DIMENSIONS:					
PRINCIPAL BUILDING:					
FRONT YARD SETBACK:	25 FT.	25+ FT.	25+ FT.	25+ FT.	NONE
REAR YARD SETBACK:	20 FT.	20+ FT.	20+ FT.	20+ FT.	NONE
ONE SIDE YARD SETBACK:	10 FT.	10+ FT.	10+ FT.	10+ FT.	NONE
COMBINED SIDE YARD SETBACK:	NONE	NONE	NONE	NONE	NONE
MAXIMUM % OF LOT TO BE OCCUPIED:					
PRINCIPAL BUILDING COVERAGE:	30% OF LOT AREA	26.6 % OF LOT AREA	26.6 % OF LOT AREA	26.6 % OF LOT AREA	NONE
MAXIMUM HEIGHT:					
PRINCIPAL BUILDING - FEET:	35 FEET	35FT MAX	35 FT MAX	35 FT MAX	NONE
PRINCIPAL BUILDING - STORIES:	2 1/2	2 1/2 MAX	2 1/2 MAX	2 1/2 MAX	NONE

ZONING SCHEDULE: MIXED USE LOT 4

ZONING DISTRICT:	B-4A DISTRICT, MEDICAL AND HEALTH CARE FACILITY MIXED USE		
DIMENSIONAL REGULATIONS:	REQUIRED	MIXED USE PROVIDED	VARIANCE REQUIRED
MINIMUM SIZE OF LOT:			
MINIMUM LOT AREA:	120,000 SF.	225,434 SF.	NONE
MINIMUM LOT WIDTH:	200 FT.	590 FT.	NONE
MINIMUM LOT DEPTH:	200 FT.	355 FT.	NONE
MINIMUM YARD DIMENSIONS:			
PRINCIPAL BUILDING:			
FRONT YARD SETBACK.*	0 FT.	5 FT.	NONE
REAR YARD SETBACK:	10 FT.	29 FT.	NONE
ONE SIDE YARD SETBACK:	10 FT.	10+ FT.	NONE
COMBINED SIDE YARD SETBACK:	25 FT.	< 25 FT.	NONE
MAXIMUM % OF LOT TO BE OCCUPIED:			
PRINCIPAL BUILDING COVERAGE:	25% OF LOT AREA	23.4% OF LOT AREA	NONE
OPEN SPACE:	15 %	47 %	
MAXIMUM HEIGHT:			
PRINCIPAL BUILDING - FEET:	35 FEET	35 FT MAX	NONE
PRINCIPAL BUILDING - STORIES:	2 1/2	2 1/2 MAX	NONE

* FRONTAGE ON NYS HIGHWAY

Butterfield Parking Schedule

Building	Land Use	Parking Code Standard	Code Required Parking Spaces	Required parking spaces w/ full 20% reduction waiver applied	Conforming parking spaces provided	Total spaces provided, including non-conforming* * spaces
1	Retail (6,000 SF) -Ground Floor	1 Space per 150 SF	40	32	55	63
	Office (9,000 SF) -Upper 2nd and 3rd floor levels	1 Space per 300 SF	30	24		
2	Retail (6,000 SF) -Ground Floor	1 Space per 150 SF	40	32	59	67
	Office (10,000 SF) -Upper 2nd and 3rd floor levels	1 Space per 300 SF	33	27		
Lahey Pavilion	Existing	—	35	35*	35	35
3 - (25 units)	Senior Housing	1 space per unit	25	20	25	25
4,5, & 6 -(30 units)	Senior Housing	1 space per unit	30	24	33	38
Total Parking			**233**	**194**	**207 Represents a 11.2% reduction waiver applied**	**228**

* No parking reduction waiver taken for Lahey Pavilion.

** Non-conforming spaces consist of 5 Perpendicular Spaces @ 9' x 16' and 16 paralell spaces @ 7' x 21'

There is a total of 6 parking spaces provided for the 3 separate single-family homes (2 per lot), which is in full compliance with the code. These spaces are not included in the total count above.

LEGEND

- PROPERTY LINE / RIGHT OF WAY
- PROPOSED ROAD CENTERLINE
- PROPOSED CURB
- CONSERVATION EASEMENT LINE
- PROPOSED LIGHT POST
- PROPOSED TRAFFIC SIGN
- PROPOSED HANDICAP PARKING
- ADA ACCESSIBLE RAMP
- ADA ACCESSBILE ROUTES
- DIRECTIONAL ARROW

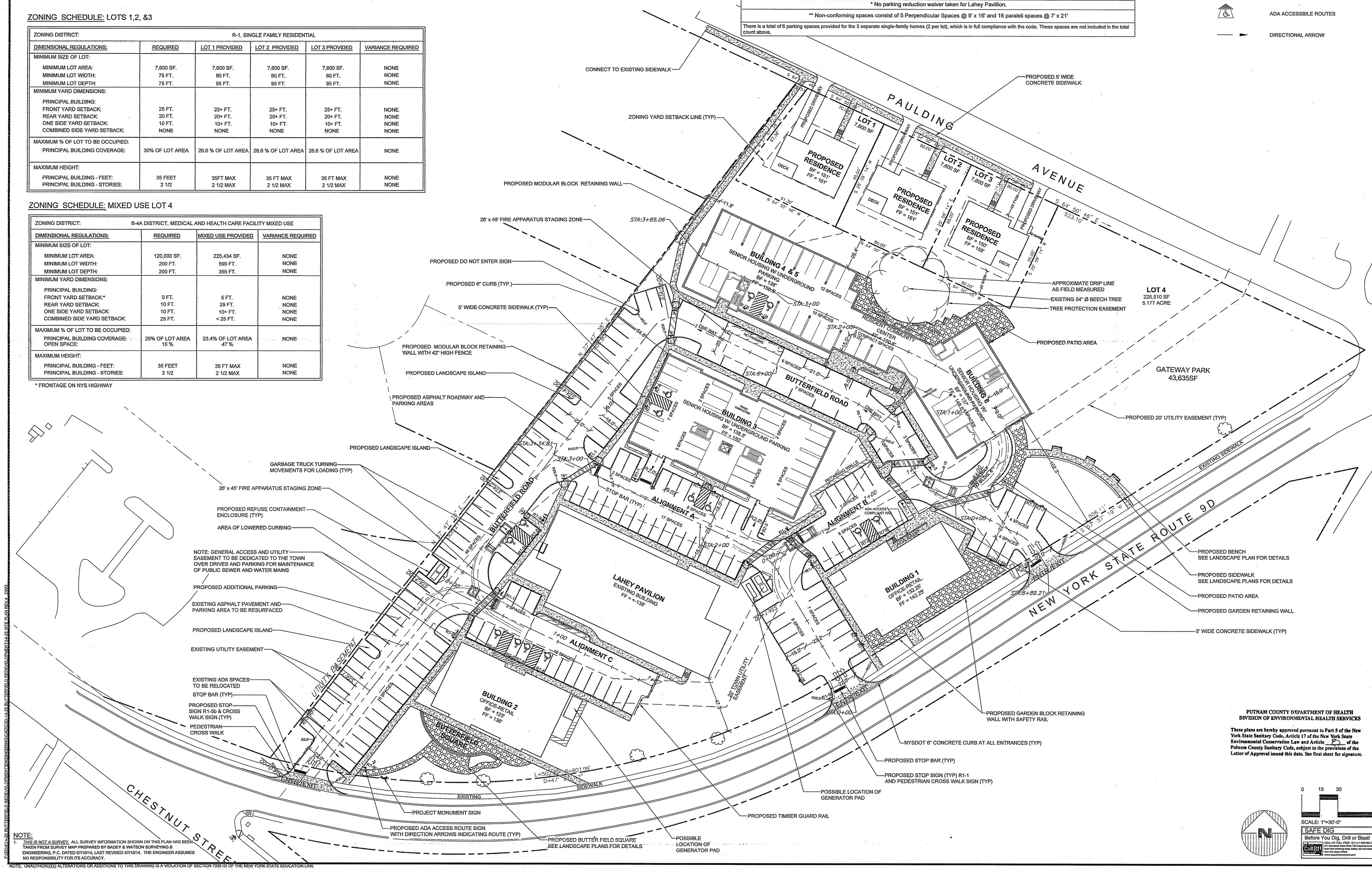

PUTNAM COUNTY DEPARTMENT OF HEALTH
DIVISION OF ENVIRONMENTAL HEALTH SERVICES

These plans are hereby approved pursuant to Part 5 of the New York State Sanitary Code, Article 17 of the New York State Environmental Conservation Law and Article 2 of the Putnam County Sanitary Code, subject to the provisions of the Letter of Approval issued this date. See first sheet for signature.

0 15 30 60
SCALE: 1"=30'-0"

SAFE DIG
Before You Dig, Drill or Blast!
Call811 CALL US TOLL FREE: 811 or 1-800-962-7962 NY Excavation Code Rule 753 requires no less than two working days notice, but not more than ten calendar days. www.digsafelynewyork.com

NOTE:
1. *THIS IS NOT A SURVEY.* ALL SURVEY INFORMATION SHOWN ON THIS PLAN HAS BEEN TAKEN FROM SURVEY MAP PREPARED BY BADEY & WATSON SURVEYING & ENGINEERING, P.C. DATED 07/10/14, LAST REVISED 07/10/14. THE ENGINEER ASSUMES NO RESPONSIBILITY FOR ITS ACCURACY.

NOTE: UNAUTHORIZED ALTERATIONS OR ADDITIONS TO THIS DRAWING IS A VIOLATION OF SECTION 7209 (2) OF THE NEW YORK STATE EDUCATION LAW.

F:\2014\14-25 BUTTERFIELD REDEVELOPMENT\ENGINEERING\CADD\14-25 BUTTERFIELD REDEVELOPMENT14-25 SITE PLAN REV4.DWG

PROJECT # 14-25

COPYRIGHT © 2012 BY SITE DESIGN CONSULTANTS, ALL RIGHTS RESERVED

Site Design Consultants
Civil Engineers • Land Planners
251-F Underhill Avenue, Yorktown Heights, NY 10598
(914) 962-4488 - Fax: (914) 962-7386
www.sitedesignconsultants.com

Engineer: STATE OF NEW YORK JOSEPH C. CARIDO RHINA LICENSED PROFESSIONAL ENGINEER
Joseph C. Carido, P.E.
NYS Lic. No. 64631

Revisions: No.	Date	Comments:
1	12-3-14	Revisions per comments from B&L
2	1-7-15	Revisions per comments from B&L
3	2-10-15	Revisions per comments from B&L
4	2-19-15	Parking Schedule
5	3-13-15	Revisions per NYSDOT
6	4-13-15	Revisions per comments from B&L
7	4-23-15	Revisions per comments from PCDOH
8	4-27-15	Revisions per comments from PCDOH meeting

SCALE: 1" = 30'
DRAWN BY: EL
DATE: 10/22/14

SITE /SUBDIVISION PLAN

SITE/SUBDIVISION PLAN PREPARED FOR

Butterfield Redevelopment Project

1756 NYS ROUTE 9D

Village Of Cold Spring — Putnam County, New York

C - 101

LEGEND

222	EXISTING GRADING
× 222.8	EXISTING SPOT GRADE
	PROPERTY LINE / RIGHT OF WAY
	EXISTING TREE TO BE PROTECTED
	EXISTING TREE TO BE REMOVED
	EXISTING TO BE REMOVED

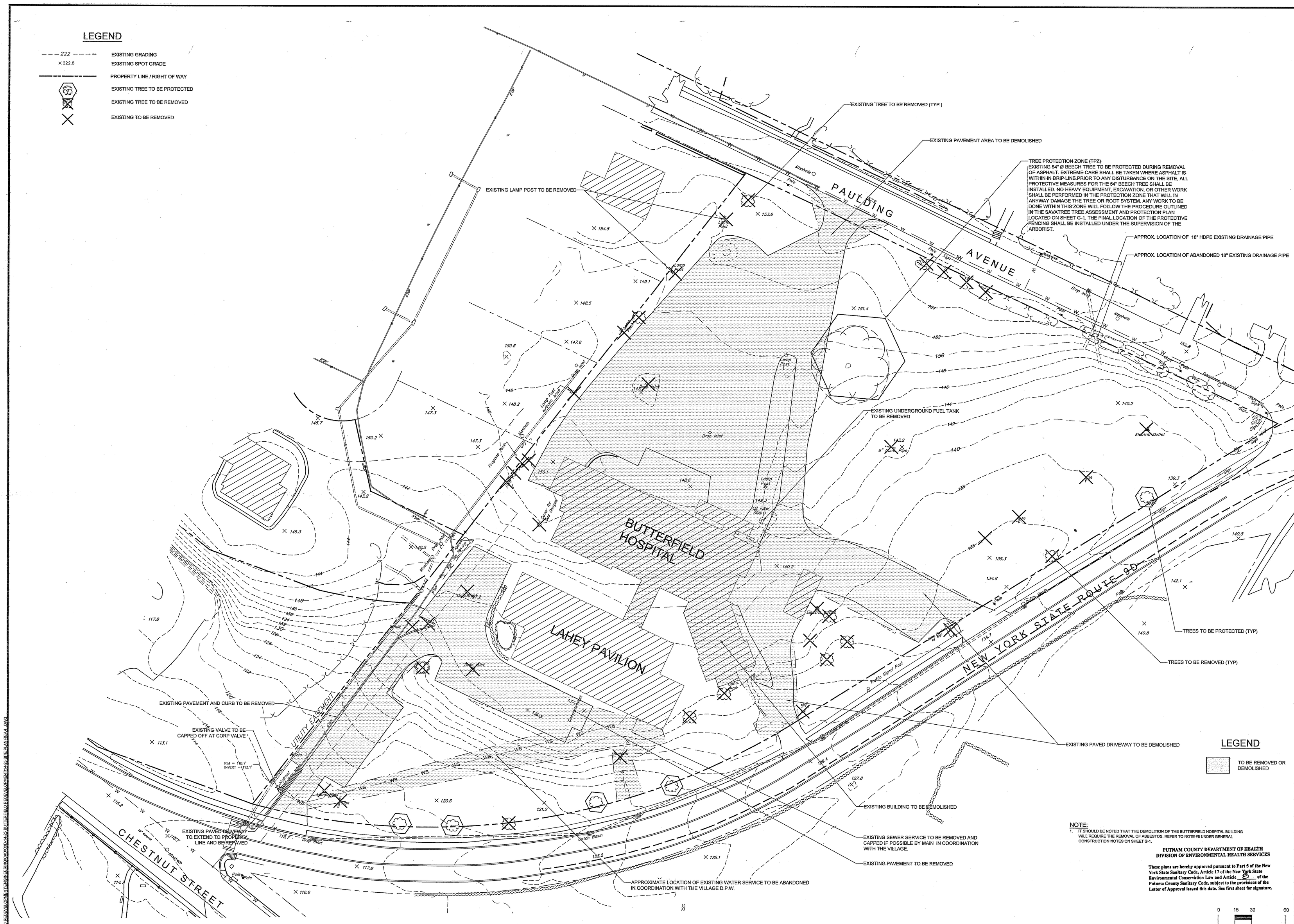

NOTE:
1. IT SHOULD BE NOTED THAT THE DEMOLITION OF THE BUTTERFIELD HOSPITAL BUILDING WILL REQUIRE THE REMOVAL OF ASBESTOS. REFER TO NOTE #8 UNDER GENERAL CONSTRUCTION NOTES ON SHEET G-1.

PUTNAM COUNTY DEPARTMENT OF HEALTH
DIVISION OF ENVIRONMENTAL HEALTH SERVICES

These plans are hereby approved pursuant to Part 5 of the New York State Sanitary Code, Article 17 of the New York State Environmental Conservation Law and Article ___ of the Putnam County Sanitary Code, subject to the provisions of the Letter of Approval issued this date. See first sheet for signature.

NOTE:
1. *THIS IS NOT A SURVEY.* ALL SURVEY INFORMATION SHOWN ON THIS PLAN HAS BEEN TAKEN FROM SURVEY MAP PREPARED BY BADEY & WATSON SURVEYING & ENGINEERING, P.C. DATED 07/10/14, LAST REVISED 07/10/14. THE ENGINEER ASSUMES NO RESPONSIBILITY FOR ITS ACCURACY.

NOTE: UNAUTHORIZED ALTERATIONS OR ADDITIONS TO THIS DRAWING IS A VIOLATION OF SECTION 7209 (2) OF THE NEW YORK STATE EDUCATION LAW.

S:\2014\14-25 BUTTERFIELD REDEVELOPMENT\ENGINEERING\CAD\CSD-14-25 BUTTERFIELD REDEVELOPMENT\14-25 SITE PLAN REV 4.DWG

PROJECT # 14-25

Site Design Consultants
Civil Engineers • Land Planners
251-F Underhill Avenue, Yorktown Heights, NY 10598
(914) 962-4488 - Fax: (914) 962-7386
www.sitedesignconsultants.com

COPYRIGHT © 2012 BY SITE DESIGN CONSULTANTS, ALL RIGHTS RESERVED

Engineer:
STATE OF NEW YORK — JOSEPH C. RUINA — LICENSED PROFESSIONAL ENGINEER
Joseph C. Ruina, P.E.
NYS Lic. No. 64421

Revisions:

No.	Date	Comments:
1	12-3-14	Revisions per comments from B&L.
2	1-6-15	Revisions per comments from B&L.
3	2-9-15	Revisions per comments from B&L.
4	2-19-15	Parking Schedule
5	3-13-15	Revisions per NYSDOT
6	3-23-15	Revisions per comments from B&L.
7	4-23-15	Revisions per comments from PCDOH
8	4-27-15	Revisions per comments from PCDOH meeting.

SCALE: 1" = 30'
DRAWN BY: EL
DATE: 10/22/14

EXISTING CONDITIONS & DEMOLITION PLAN

SITE/SUBDIVISION PLAN
PREPARED FOR

Butterfield Redevelopment Project

1756 NYS ROUTE 9D

Village Of Cold Spring — Putnam County, New York

C - 102

CONTRACTOR CERTIFICATION STATEMENT

Certification Statement - All contractors and subcontractors as identified in a SWPPP, by the Owner or Operator, in accordance with Part III.A.5 of the SPDES General Permit for Stormwater Runoff from Construction Activity, GP-0-10-001, dated January 28, 2010, Page 10 of 40, shall sign a copy of the following Certification Statement before undertaking any construction activity at the Site identified in the SWPPP:

"I hereby certify that I understand and agree to comply with the terms and conditions of the SWPPP and agree to implement any corrective actions identified by the Qualified Inspector during a site inspection. I also understand that the Owner or Operator must comply with the terms and conditions of the New York State Pollutant Discharge Elimination System ("SPDES") General Permit for Stormwater Discharge from Construction Activities and that it is unlawful for any person to cause or contribute to a violation of water quality standards. Furthermore, I understand that certifying false, incorrect or inaccurate information is a violation of the referenced permit and the laws of the State of New York and could subject me to criminal, civil and/or administrative proceedings."

Individual Contractor: _____

Name and Title (please print): _____

Signature of Contractor: _____

Company / Contracting Firm: _____

Name of Company: _____

Address of Company: _____

Telephone Number / Cell Number: _____

Site Information: _____

Address of Site: _____

_____

Today's Date: _____

OWNER / OPERATOR CERTIFICATION

"I certify under penalty of law that this document and all attachments were prepared under my direction or supervision in accordance with a system designed to assure that qualified personnel properly gathered and evaluated the information submitted. Based on my inquiry of the person or persons who manage the system, or those persons directly responsible for gathering the information, the information submitted is, to the best of my knowledge and belief, true, accurate, and complete. Further, I hereby certify that the SWPPP meets all Federal, State, and local erosion and sediment control requirements. I am aware that false statements made herein are punishable as a Class A misdemeanor pursuant to Section 210.45 of the Penal Law."

Name (please print): _____

Title: _____

Date: _____

Address: _____

Phone: _____

E-mail: _____

Signature: _____

PROJECT DISTURBANCE SUMMARY

PHASE I: RESIDENTIAL LOTS

PHASE II: MAIN ENTRANCE OFF OF ROUTE 9D UP TO THE LAHEY PAVILION INCLUDING BUILDING 2

PHASE III: GATEWAY PARK AND THE REMAINING PROPOSED ROADWAY AND BUILDING 3

PHASE IV: BUILDINGS 4,5,& 6 WITH BUILDING 1

PROJECT DISTURBANCE

PHASE I: 0.727 ACRE

PHASE II: 1.322 ACRE

PHASE III: 2.907 ACRE

PHASE IV: 0.757 ACRE

LEGEND

- EXISTING GRADING
- EXISTING SPOT GRADE
- PROPOSED GRADING
- PROPOSED SPOT GRADE
- PROPERTY LINE / RIGHT OF WAY
- PROPOSED TRAFFIC SIGN
- PROPOSED RETAINING WALLS
- PROPOSED SOIL STOCKPILES
- CONCRETE WASHOUT PIT
- PROPOSED SILT FENCE
- PROPOSED CRUSHED STONE INLET PROTECTION
- PROPOSED TEMPORARY WATER BAR
- PROPOSED STABILIZED CONSTRUCTION ENTRANCE
- PROPOSED LIMIT OF DISTURBANCE
- PROPOSED EROSION BLANKET / PERMANENT SEED
- EXISTING TREE TO BE PROTECTED
- EXISTING TREE TO BE REMOVED
- PROPOSED TEMPORARY DIVERSION SWALE

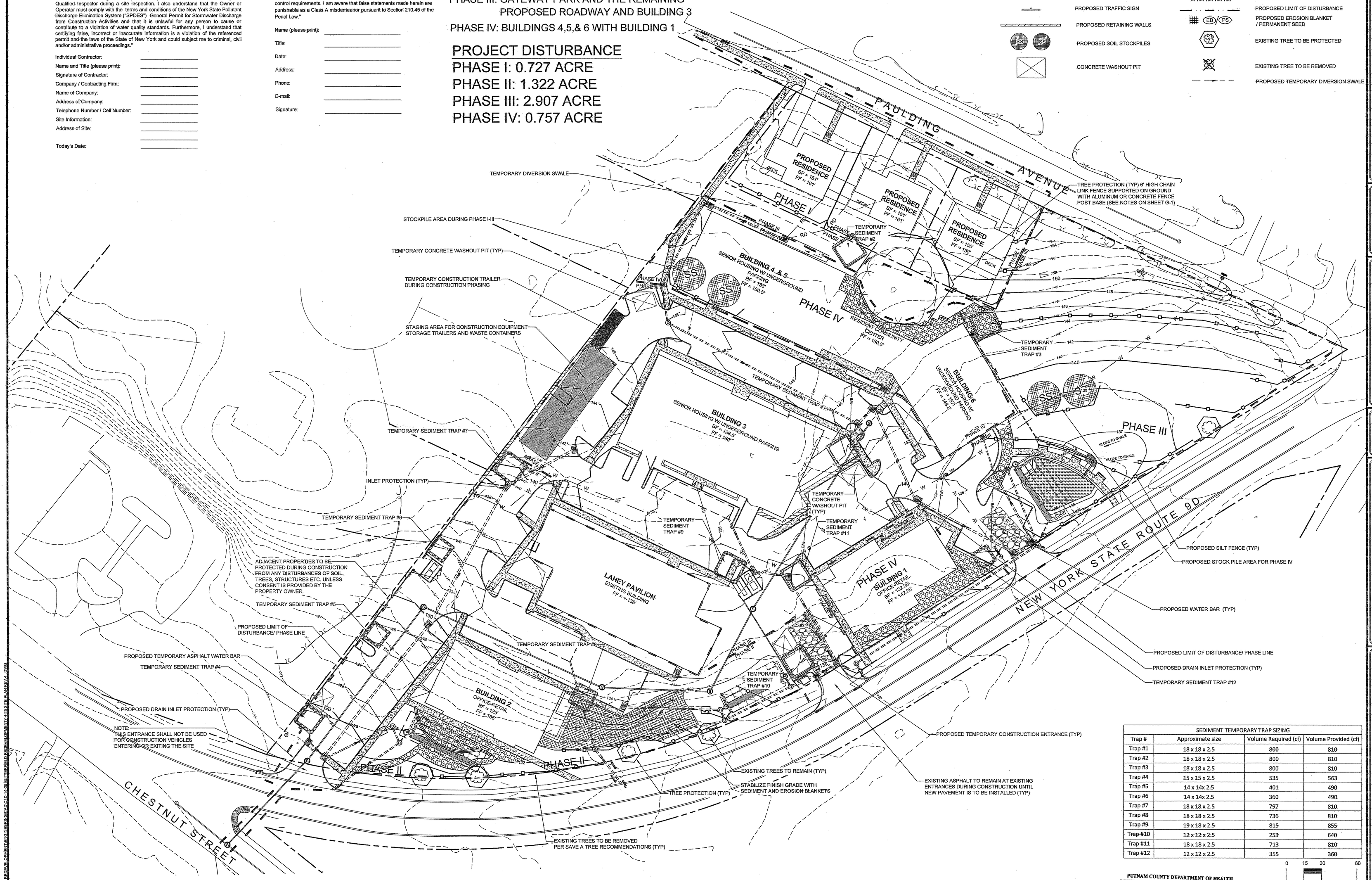

SEDIMENT TEMPORARY TRAP SIZING			
Trap #	Approximate size	Volume Required (cf)	Volume Provided (cf)
Trap #1	18 x 18 x 2.5	800	810
Trap #2	18 x 18 x 2.5	800	810
Trap #3	18 x 18 x 2.5	800	810
Trap #4	15 x 15 x 2.5	535	563
Trap #5	14 x 14x 2.5	401	490
Trap #6	14 x 14x 2.5	360	490
Trap #7	18 x 18 x 2.5	797	810
Trap #8	18 x 18 x 2.5	736	810
Trap #9	19 x 18 x 2.5	815	855
Trap #10	12 x 12 x 2.5	253	640
Trap #11	18 x 18 x 2.5	713	810
Trap #12	12 x 12 x 2.5	355	360

PUTNAM COUNTY DEPARTMENT OF HEALTH
DIVISION OF ENVIRONMENTAL HEALTH SERVICES

These plans are hereby approved pursuant to Part 5 of the New York State Sanitary Code, Article 17 of the New York State Environmental Conservation Law and Article 8 of the Putnam County Sanitary Code, subject to the provisions of the Letter of Approval issued this date. See first sheet for signature.

0 15 30 60

SCALE: 1"=30'-0"

SAFE DIG
Before You Dig, Drill or Blast!
CALL US TOLL FREE 811 or 1-800-962-7962
It's the law and helps you. Call requests no less than two and not more than ten business days in advance, not including the day you call. www.digsafelynewyork.com

NOTE:
1. THIS IS NOT A SURVEY. ALL SURVEY INFORMATION SHOWN ON THIS PLAN HAS BEEN TAKEN FROM SURVEY MAP PREPARED BY BADEY & WATSON SURVEYING & ENGINEERING, P.C. DATED 07/10/14, LAST REVISED 07/16/14. THE ENGINEER ASSUMES NO RESPONSIBILITY FOR ITS ACCURACY.

NOTE: UNAUTHORIZED ALTERATIONS OR ADDITIONS TO THIS DRAWING IS A VIOLATION OF SECTION 7209 (2) OF THE NEW YORK STATE EDUCATION LAW.

F:\2014\14-25 BUTTERFIELD REDEVELOPMENT\ENGINEERING\CADD\D-14-25 BUTTERFIELD REDEVELOPMENT14-25 SITE PLAN ARCH A.DWG

PROJECT # 14-25

Site Design Consultants
Civil Engineers • Land Planners
251-F Underhill Avenue, Yorktown Heights, NY 10598
(914) 962-4488 - Fax: (914) 962-7386
www.sitedesignconsultants.com

COPYRIGHT © 2012 BY SITE DESIGN CONSULTANTS, ALL RIGHTS RESERVED

Engineer:

STATE OF NEW YORK · JOSEPH CARLO RUINA · LICENSED PROFESSIONAL ENGINEER

Joseph C. Ruina, P.E.
NYS Lic. No. 64401

Revisions:

No.	Date	Comments:
1	12-3-14	Revisions per comments from B&L
2	1-20-15	Revisions per comments from B&L
3	2-5-15	Revisions per comments from B&L
4	2-10-15	Parking Schedule
5	3-13-15	Revisions per NYSDOT
6	4-2-15	Revisions per comments from B&L
7	4-23-15	Revisions per comments from PCDOH
8	4-27-15	Revisions per comments from PCDOH meeting

SCALE: 1" = 30'

DRAWN BY: EL

DATE: 10/22/14

EROSION & SEDIMENT CONTROL PLAN

SITE/SUBDIVISION PLAN
PREPARED FOR

Butterfield Redevelopment Project

1756 NYS ROUTE 9D

Village Of Cold Spring, Putnam County, New York

C - 103

F:\2014\14-25 BUTTERFIELD REDEVELOPMENT\ENGINEERING\CAD\C3D-14-25 BUTTERFIELD REDEVELOPMENT\14-25 SITE PLAN REV.4 .DWG

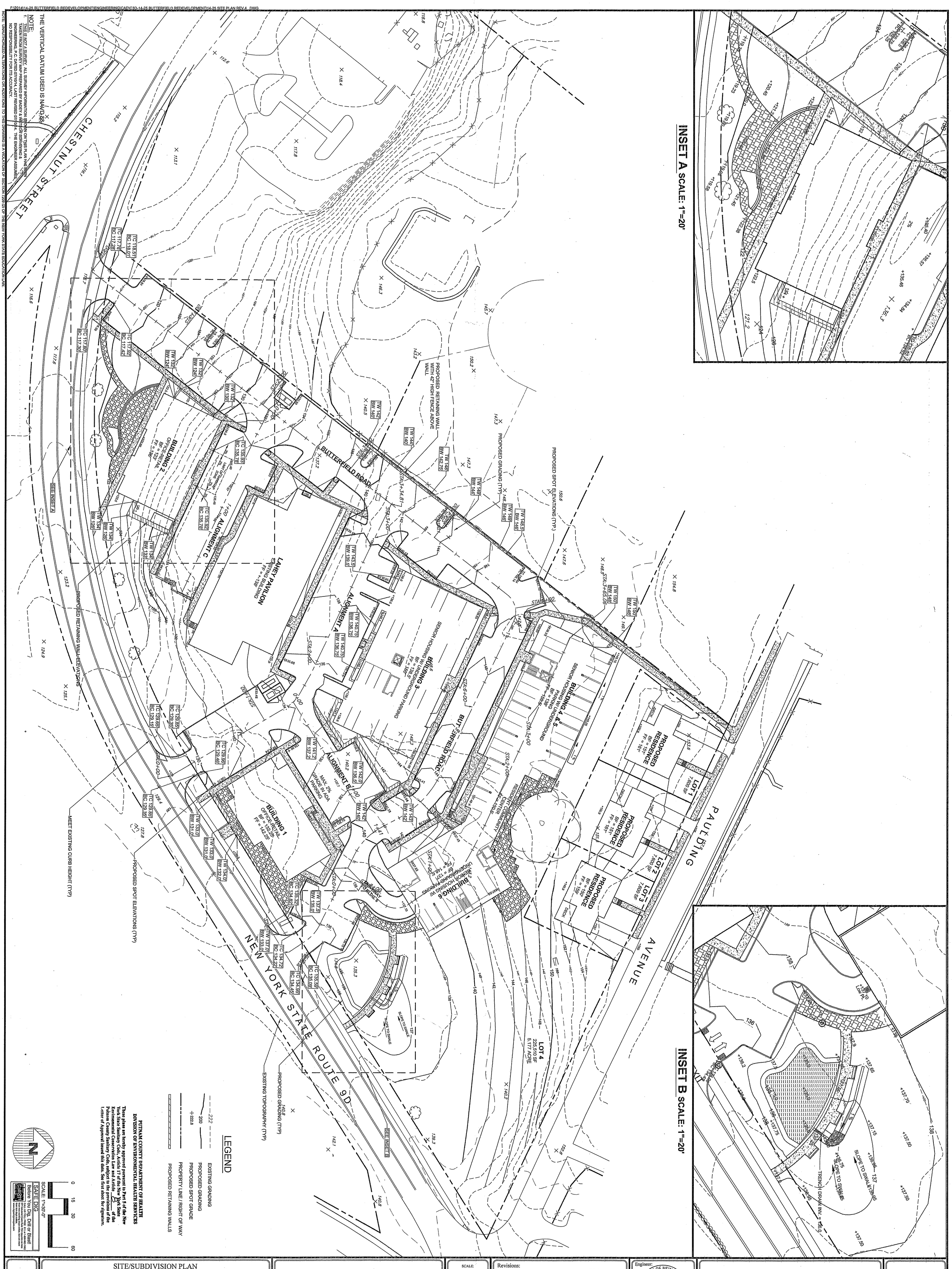

THE VERTICAL DATUM USED IS NAVD 88

NOTE:
1. *THIS IS NOT A SURVEY.* ALL SURVEY INFORMATION SHOWN ON THIS PLAN HAS BEEN TAKEN FROM SURVEY MAP PREPARED BY BADEY & WATSON SURVEYING & ENGINEERING, P.C. DATED 07/10/14, LAST REVISED 07/10/14. THE ENGINEER ASSUMES NO RESPONSIBILITY FOR ITS ACCURACY.

NOTE: UNAUTHORIZED ALTERATIONS OR ADDITIONS TO THIS DRAWING IS A VIOLATION OF SECTION 7209 (2) OF THE NEW YORK STATE EDUCATION LAW.

C - 104

SITE/SUBDIVISION PLAN
PREPARED FOR

Butterfield Redevelopment Project

1756 NYS ROUTE 9D

Village Of Cold Spring — Putnam County, New York

GRADING PLAN

SCALE: 1" = 30'

DRAWN BY: EL

DATE: 10/22/14

Revisions:

No.	Date	Comments:
1	12-3-14	Revisions per comments from B&L
2	1-9-15	Revisions per comments from B&L
3	2-10-15	Revisions per comments from B&L
4	2-19-15	Parking Schedule
5	3-13-15	Revisions per NYSDOT
6	3-23-15	Revisions per comments from B&L
7	4-23-15	Revisions per comments from PCDOH
8	4-27-15	Revisions per comments from PCDOH meeting

Engineer:
STATE OF NEW YORK — JOSEPH CARLO RIINA — NO. 64431 — LICENSED PROFESSIONAL ENGINEER
Joseph C. Riina, P.E.
NYS Lic. No. 64431

Site Design Consultants
Civil Engineers • Land Planners
251-F Underhill Avenue, Yorktown Heights, NY 10598
(914) 962-4488 - Fax: (914) 962-7386
www.sitedesignconsultants.com

PROJECT # 14-25

COPYRIGHT © 2012 BY SITE DESIGN CONSULTANTS, ALL RIGHTS RESERVED

DRAINAGE RIMS AND INVERTS								
NODE	RIM	INV IN	INV OUT	DOWNSTREAM NODE	DOWNST REAM INV	L(FT)	S(%)	SIZE(in)
CB-1	141.15	---	136.46	CB-2	134.81	63	2.5	15
CB-2	139.05	134.81	134.55	CB-3	126.31	130	6.2	15
CB-3	129.34	126.31	125.55	CB-4	113.97	138	8.2	15
CB-4	117.91	114.55	113.72	Crystal Stream Unit 1	113.45	48	0.5	15
Crystal Stream Unit 1	121.44	113.45	113.3	Bypass 1	113.25	5	0.5	15
Bypass 1	121.70	113.25	113.0	DMH-1	112.92	11	0.5	12
DMH-1	121.02	112.92	112.67	Existing CB 2	112.31	68	0.5	12
CB-5	118.26	---	114.75	CB-4	114.55	18	1	15
Bypass 1	121.70	113.25	112.90	Infil. Sys. 1	112.86	8	0.5	15
DI-1	149.02	147.78	145.52	DI-2	145.17	67	0.5	15
DI-2	150.00	145.17	144.92	DMH-2	144.89	3	0.5	15
DMH-2	150.08	144.89	144.65	DMH-3	144.26	73	0.5	15
DMH-3	148.02	144.26	144.01	DMH-4	143.85	28	0.5	15
DMH-4	148.02	143.85	143.60	CB-11	139.60	177	2.2	15
CB-11	143.91	139.6	139.35	CB-12	139.26	16	0.5	15
CB-12	144.00	139.26	139.01	CB-13	135.75	82	3.8	15
CB-13	138.00	135.75	135.5	CB-14	131.62	89	4.2	15
CB-14	135.31	131.62	131.37	CB-15	131.28	16	0.5	15
CB-15	135.83	131.28	131.03	Crystal Stream Unit 3	130.71	58	0.5	15
Crystal Stream Unit 3	136.97	130.71	130.46	Bypass 3	130.41	4	0.5	15
Bypass 3	136.97	130.41	130.16	Infil. Sys. 3	130.13	4	0.5	15
Bypass 3	136.97	130.41	130.16	DMH-6	129.82	65	0.5	12
INFIL. SYS. 3	136.72	129.09	131.57	DMH-6	130.49	35	4.9	6
DMH-6	135.00	129.82	129.57	DMH-7	125.88	179	2.0	12
DMH-7	130.00	125.88	125.63	EXisting CB 4	125.54	15	0.5	12
R.W.H 2	134.86	---	133	CB-6	130.87	46	4.5	12
CB-6	134.02	130.87	130.62	CB-7	129.72	28	2.9	15
CB-7	133.95	129.72	129.47	CB-8	126.03	79	4.1	15
CB-8	130.01	126.03	125.78	CB-9	125.68	19	0.5	15
CB-9	130.04	125.68	125.43	Crystal Stream Unit 2A	125.38	6	0.5	15
Crystal stream Unit 2A	130.00	125.38	125.13	Bypass 2A	125.06	14	0.8	15
Bypass 2A	129.77	125.06	124.5	DMH-8	122.11	57	3.8	12
Bypass 2A	129.77	125.06	123.12	Infil. Sys. 2	123.05	3	0.5	15
DMH-8	127.46	122.11	121.86	DMH-5	119.02	108	2.5	12
CB-10	133.25	---	124.66	Crystal Stream Unit 2B	123.6	56	1.8	12
Crystal Stream Unit 2B	128.22	123.6	123.45	Bypass 2B	123.34	17	0.5	12
Bypass 2B	127.14	123.34	123.09	DMH-8	122.11	6	10.2	12
Bypass 2B	127.14	123.34	122.84	Infil. Sys. 2	123.05	3	0.5	15
DMH-8	127.46	122.11	121.86	DMH-5	119.02	108	2.5	12
R.W.H 1	132.35	---	130.75	DMH-5	118.97	75	15.4	12
DMH-5	122.88	118.97	118.72	Existing CB 3	118.41	35	0.83	12
DI-3	144.30	---	142.05	DAYLIGHT	137.65	89	4.9	6
DI-4	137.01	---	134.34	Crystal Stream Unit 3	130.71	31	11.7	12

Note:
This table does not reflect any invert elevations of roof drains or footing drains. Please refer to table "roof drains and footing drain inverts".

SEWER MANHOLE RIMS AND INVERTS							
NODE	RIM	INV IN	INV OUT	DOWNSTREAM NODE	L(FT)	S(%)	SIZE(in)
SMH-1	143.32	---	135.09	SMH-2	181	4	8
SMH-2	133.55	127.57	127.57	SMH-3	75	4.2	8
SMH-3	128.92	124.40	124.05	SMH-4	87	1	8
SMH-4	128.00	123.10	123.10	SMH-5	161	0.6	8
SMH-5	130.34	122.13	122.13	SMH-6	171	6	8
SMH-6	116.77	111.80	111.80	SMH-7	83	2.4	8
SMH-7	116.32	109.72					

ROOF DRAINS AND FOOTING DRAIN INVERTS						
UP STR. ID	INV. OUT	DOWN STR. ID	INV IN	L(FT)	S(%)	SIZE(in)
RD FROM RES. LOTS	149.02	DI-1	147.78	62	2.0	6
RD FROM RES. LOTS & BLDG. 6	148.24	DI-3	142.65	45	12.4	6
FD FROM BLDG 3	133.95	CB-7	132.94	50	2.0	6
RD FROM BLDG. 4&5	144.00	CB-12	143.00	28	3.6	6
FD FROM BLDG 6	135.83	CB-15	132.83	101	3.0	6
FD & RD FROM BLDG. 1	130.01	CB-8	126.03	20	19.4	6
RD FROM BLDG. 3	132.35	R.W.H.#2	131.20	25.00	4.5	6
RD FROM LAHEY & BLDG. 2	134.86	R.W.H.#1	133.50	27	5.0	6
RD FROM BLDG.2	122.00	BYPASS 1	113.27	45	19.4	6
FD FROM BLDG. 2	122.00	DMH-5	118.97	50	6.1	6

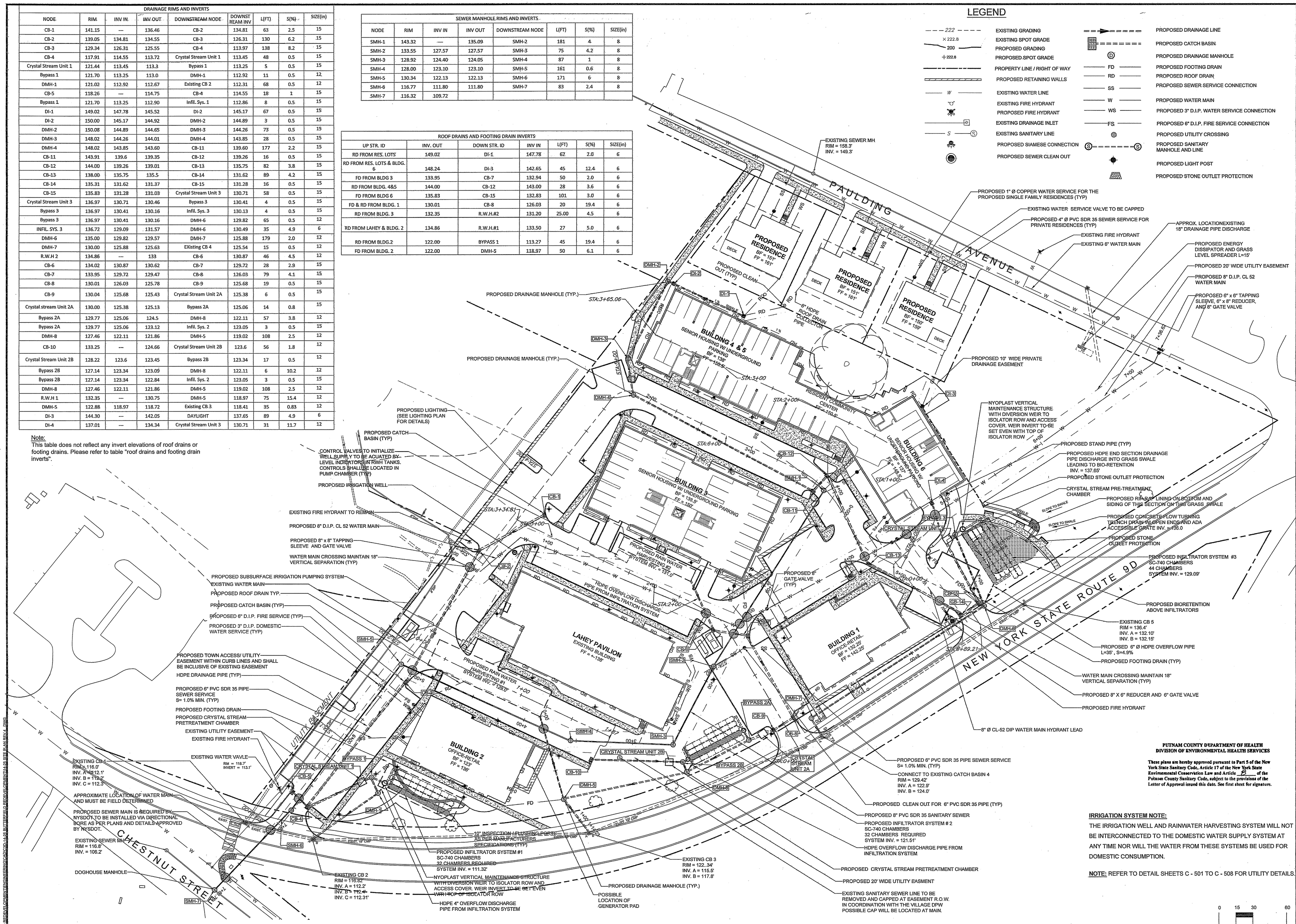

PUTNAM COUNTY DEPARTMENT OF HEALTH
DIVISION OF ENVIRONMENTAL HEALTH SERVICES

These plans are hereby approved pursuant to Part 5 of the New York State Sanitary Code, Article 17 of the New York State Environmental Conservation Law and Article ___ of the Putnam County Sanitary Code, subject to the provisions of the Letter of Approval issued this date. See first sheet for signature.

IRRIGATION SYSTEM NOTE:

THE IRRIGATION WELL AND RAINWATER HARVESTING SYSTEM WILL NOT BE INTERCONNECTED TO THE DOMESTIC WATER SUPPLY SYSTEM AT ANY TIME NOR WILL THE WATER FROM THESE SYSTEMS BE USED FOR DOMESTIC CONSUMPTION.

NOTE: REFER TO DETAIL SHEETS C - 501 TO C - 508 FOR UTILITY DETAILS.

NOTE:
1. *THIS IS NOT A SURVEY.* ALL SURVEY INFORMATION SHOWN ON THIS PLAN HAS BEEN TAKEN FROM SURVEY MAP PREPARED BY BADEY & WATSON SURVEYING & ENGINEERING, P.C. DATED 07/10/14, LAST REVISED 07/10/14. THE ENGINEER ASSUMES NO RESPONSIBILITY FOR ITS ACCURACY.

NOTE: UNAUTHORIZED ALTERATIONS OR ADDITIONS TO THIS DRAWING IS A VIOLATION OF SECTION 7209 (2) OF THE NEW YORK STATE EDUCATION LAW.

COPYRIGHT © 2012 BY SITE DESIGN CONSULTANTS, ALL RIGHTS RESERVED

PROJECT # 14-25

Site Design Consultants
Civil Engineers • Land Planners
251-F Underhill Avenue, Yorktown Heights, NY 10598
(914) 962-4488 - Fax: (914) 962-7386
www.sitedesignconsultants.com

Engineer: Joseph C. Sarafa, P.E. NYS Lic. No. 64431

Revisions:		
No.	Date	Comments:
1	12-3-14	Revisions per comments from B&L
2	1-7-15	Revisions per comments from B&L
3	2-10-15	Revisions per comments from B&L
4	2-19-15	Parking Schedule
5	3-13-15	Revisions per NYSDOT
6	4-15-15	Revisions per comments from B&L
7	4-23-15	Revisions per comments from PCDOH
8	4-27-15	Revisions per comments from PCDOH meeting

SCALE: 1" = 30'
DRAWN BY: EL
DATE: 10/22/14

UTILITY PLAN

SITE/SUBDIVISION PLAN
PREPARED FOR:

Butterfield Redevelopment Project

1756 NYS ROUTE 9D
Village Of Cold Spring
Putnam County, New York

C - 105

DRAINAGE RIMS AND INVERTS

NODE	RIM	INV IN	INV OUT	DOWNSTREAM NODE	DOWNSTREAM INV	L(FT)	S(%)	SIZE(in)
CB-1	141.15	—	136.46	CB-2	134.81	63	2.5	15
CB-2	139.05	134.81	134.55	CB-3	126.31	130	6.2	15
CB-3	129.34	126.31	125.55	CB-4	113.97	138	8.2	15
CB-4	117.91	114.55	113.72	Crystal Stream Unit 1	113.45	48	0.5	15
Crystal Stream Unit 1	121.44	113.45	113.3	Bypass 1	113.25	5	0.5	15
Bypass 1	121.70	113.25	113.0	DMH-1	112.92	11	0.5	12
DMH-1	121.02	112.92	112.67	Existing CB 2	112.31	68	0.5	12
CB-5	118.26	—	114.75	CB-4	114.55	18	1	15
Bypass 1	121.70	113.25	112.90	Infil. Sys. 1	112.86	8	0.5	15
DI-1	149.02	147.78	145.52	DI-2	145.17	67	0.5	15
DI-2	150.00	145.17	144.92	DMH-2	144.89	3	0.5	15
DMH-2	150.08	144.89	144.65	DMH-3	144.26	73	0.5	15
DMH-3	148.02	144.26	144.01	DMH-4	143.85	28	0.5	15
DMH-4	148.02	143.85	143.60	CB-11	139.60	177	2.2	15
CB-11	143.91	139.6	139.35	CB-12	139.26	16	0.5	15
CB-12	144.00	139.26	139.01	CB-13	135.75	82	3.8	15
CB-13	138.00	135.75	135.5	CB-14	131.62	89	4.2	15
CB-14	135.31	131.62	131.37	CB-15	131.28	16	0.5	15
CB-15	135.83	131.28	131.03	Crystal Stream Unit 3	130.71	58	0.5	15
Crystal Stream Unit 3	136.97	130.71	130.46	Bypass 3	130.41	4	0.5	15
Bypass 3	136.97	130.41	130.16	Infil. Sys. 3	130.13	4	0.5	15
Bypass 3	136.97	130.41	130.16	DMH-6	129.82	65	0.5	12
INFIL. SYS. 3	136.72	129.09	131.57	DMH-6	130.49	35	4.9	6
DMH-6	135.00	129.82	129.57	DMH-7	125.88	179	2.0	12
DMH-7	130.00	125.88	125.63	EXisting CB 4	125.54	15	0.5	12
R.W.H 2	134.86	—	133	CB-6	130.87	46	4.5	12
CB-6	134.02	130.87	130.62	CB-7	129.72	28	2.9	15
CB-7	133.95	129.72	129.47	CB-8	126.03	79	4.1	15
CB-8	130.01	126.03	125.78	CB-9	125.68	19	0.5	15
CB-9	130.04	125.68	125.43	Crystal Stream Unit 2A	125.38	6	0.5	15
Crystal stream Unit 2A	130.00	125.38	125.13	Bypass 2A	125.06	14	0.8	15
Bypass 2A	129.77	125.06	124.5	DMH-8	122.11	57	3.8	12
Bypass 2A	129.77	125.06	123.12	Infil. Sys. 2	123.05	3	0.5	15
DMH-8	127.46	122.11	121.86	DMH-5	119.02	108	2.5	12
CB-10	133.25	—	124.66	Crystal Stream Unit 2B	123.6	56	1.8	12
Crystal Stream Unit 2B	128.22	123.6	123.45	Bypass 2B	123.34	17	0.5	12
Bypass 2B	127.14	123.34	123.09	DMH-8	122.11	6	10.2	12
Bypass 2B	127.14	123.34	122.84	Infil. Sys. 2	123.05	3	0.5	15
DMH-8	127.46	122.11	121.86	DMH-5	119.02	108	2.5	12
R.W.H 1	132.35	—	130.75	DMH-5	118.97	75	15.4	12
DMH-5	122.88	118.97	118.72	Existing CB 3	118.41	35	0.83	12
DI-3	144.30	—	142.05	DAYLIGHT	137.65	89	4.9	6
DI-4	137.01	—	134.34	Crystal Stream Unit 3	130.71	31	11.7	12

Note:
This table does not reflect any invert elevations of roof drains or footing drains. Please refer to table "roof drains and footing drain inverts".

SEWER MANHOLE RIMS AND INVERTS

NODE	RIM	INV IN	INV OUT	DOWNSTREAM NODE	L(FT)	S(%)	SIZE(in)
SMH-1	143.32	—	135.09	SMH-2	181	4	8
SMH-2	133.55	127.57	127.57	SMH-3	75	4.2	8
SMH-3	128.92	124.40	124.05	SMH-4	87	1	8
SMH-4	128.00	123.10	123.10	SMH-5	161	0.6	8
SMH-5	130.34	122.13	122.13	SMH-6	171	6	8
SMH-6	116.77	111.80	111.80	SMH-7	83	2.4	8
SMH-7	116.32	109.72					

ROOF DRAINS AND FOOTING DRAIN INVERTS

UP STR. ID	INV. OUT	DOWN STR. ID	INV IN	L(FT)	S(%)	SIZE(in)
RD FROM RES. LOTS	149.02	DI-1	147.78	62	2.0	6
RD FROM RES. LOTS & BLDG. 6	148.24	DI-3	142.65	45	12.4	6
FD FROM BLDG 3	133.95	CB-7	132.94	50	2.0	6
RD FROM BLDG. 4&5	144.00	CB-12	143.00	28	3.6	6
FD FROM BLDG 6	135.83	CB-15	132.83	101	3.0	6
FD & RD FROM BLDG. 1	130.01	CB-8	126.03	20	19.4	6
RD FROM BLDG. 3	132.35	R.W.H.#2	131.20	25.00	4.5	6
RD FROM LAHEY & BLDG. 2	134.86	R.W.H.#1	133.50	27	5.0	6
RD FROM BLDG.2	122.00	BYPASS 1	113.27	45	19.4	6
FD FROM BLDG. 2	122.00	DMH-5	118.97	50	6.1	6

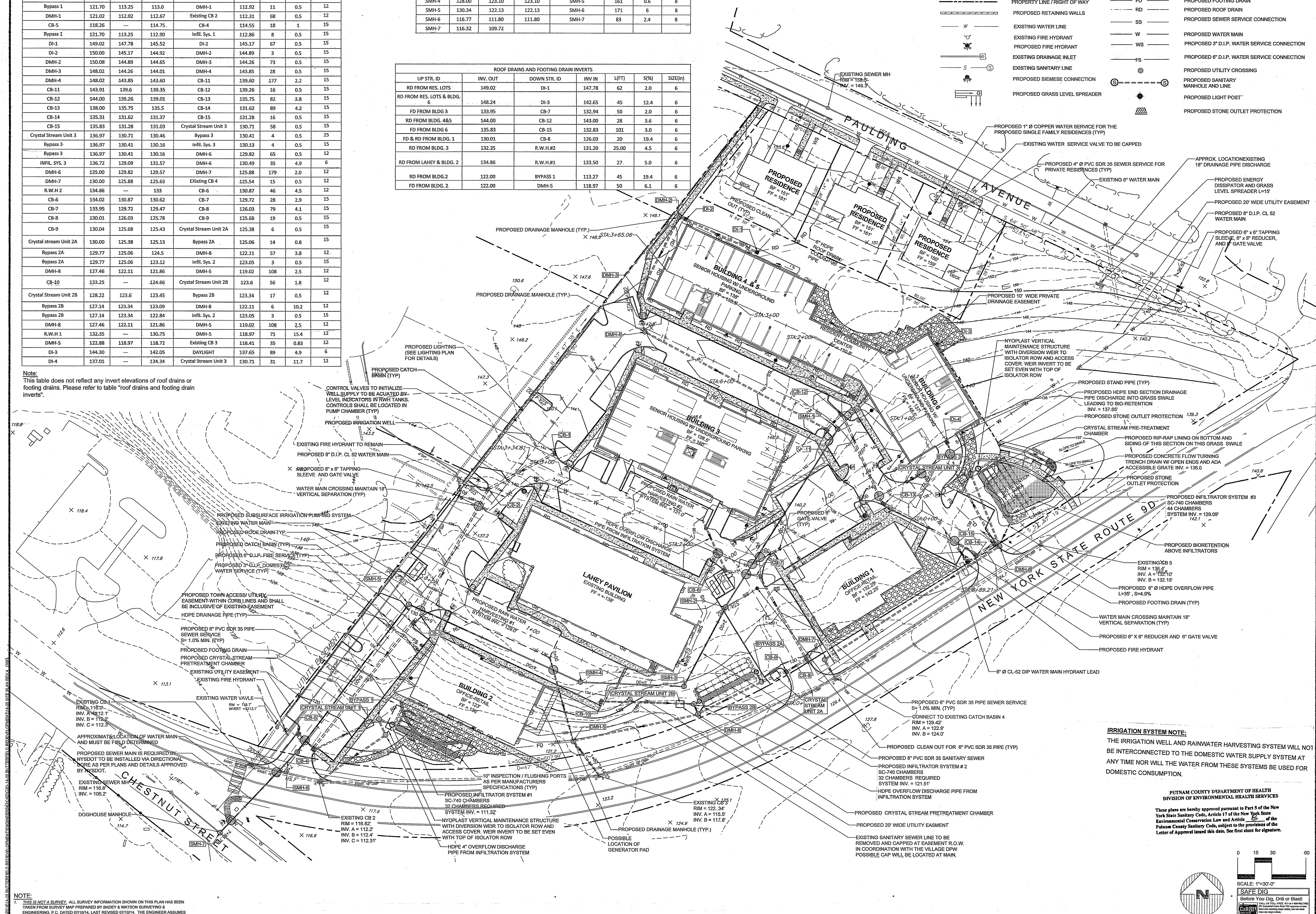

IRRIGATION SYSTEM NOTE:
THE IRRIGATION WELL AND RAINWATER HARVESTING SYSTEM WILL NOT BE INTERCONNECTED TO THE DOMESTIC WATER SUPPLY SYSTEM AT ANY TIME NOR WILL THE WATER FROM THESE SYSTEMS BE USED FOR DOMESTIC CONSUMPTION.

PUTNAM COUNTY DEPARTMENT OF HEALTH
DIVISION OF ENVIRONMENTAL HEALTH SERVICES

These plans are hereby approved pursuant to Part 5 of the New York State Sanitary Code, Article 17 of the New York State Environmental Conservation Law and Article __ of the Putnam County Sanitary Code, subject to the provisions of the Letter of Approval issued this date. See first sheet for signature.

NOTE:
1. THIS IS NOT A SURVEY. ALL SURVEY INFORMATION SHOWN ON THIS PLAN HAS BEEN TAKEN FROM SURVEY MAP PREPARED BY BADEY & WATSON SURVEYING & ENGINEERING, P.C. DATED 07/10/14, LAST REVISED 07/10/14. THE ENGINEER ASSUMES NO RESPONSIBILITY FOR ITS ACCURACY.

NOTE: UNAUTHORIZED ALTERATIONS OR ADDITIONS TO THIS DRAWING IS A VIOLATION OF SECTION 7209 (2) OF THE NEW YORK STATE EDUCATION LAW.

PROJECT # 14-25

Site Design Consultants
Civil Engineers • Land Planners
251-F Underhill Avenue, Yorktown Heights, NY 10598
(914) 962-4488 - Fax: (914) 962-7386
www.sitedesignconsultants.com
Engineer: Joseph C. Riina, P.E. NYS Lic. No. 64431

Revisions:

No.	Date	Comments:
1	12-3-14	Revisions per comments from B&L
2	1-9-15	Revisions per comments from B&L
3	2-10-15	Revisions per comments from B&L
4	2-19-15	Parking Schedule
5	3-13-15	Revisions per NYSDOT
6	3-23-15	Revisions per comments from B&L
7	4-23-15	Revisions per comments from PCDOH
8	4-27-15	Revisions per comments from PCDOH meeting

SCALE: 1" = 30'
DRAWN BY: EL
DATE: 10/22/14

GRADING AND UTILITY PLAN

SITE/SUBDIVISION PLAN
PREPARED FOR
Butterfield Redevelopment Project
1756 NYS ROUTE 9D
Village Of Cold Spring
Putnam County, New York

C - 106

COPYRIGHT © 2012 BY SITE DESIGN CONSULTANTS, ALL RIGHTS RESERVED

F:\2014\14-25 BUTTERFIELD REDEVELOPMENT\ENGINEERING\CAD\C3D-14-25 BUTTERFIELD REDEVELOPMENT\14-25 SITE PLAN REV 4 .DWG

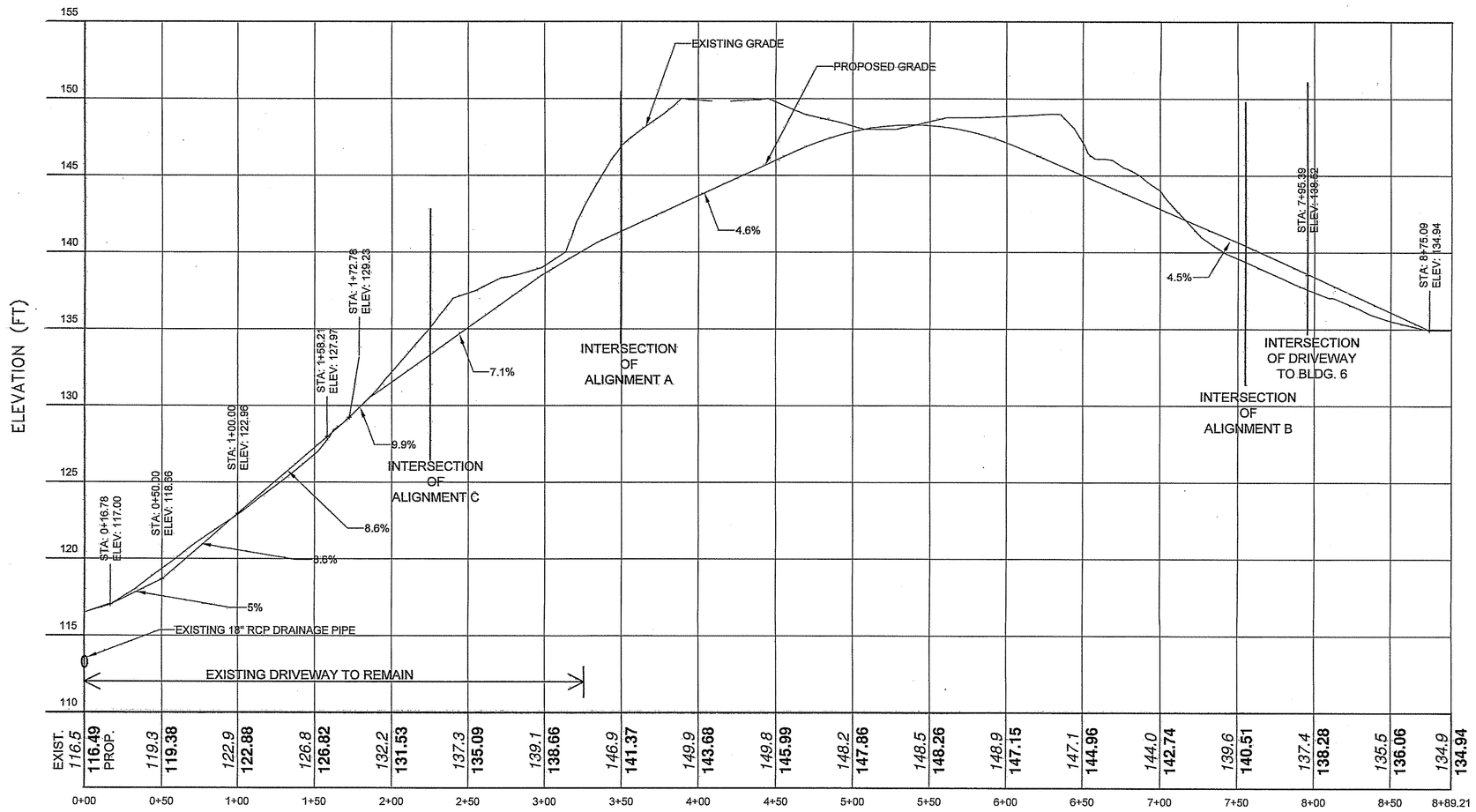

BUTTERFIELD ROAD PROFILE

SCALE: VERT. 1" = 5'
HORIZ. 1" = 50'

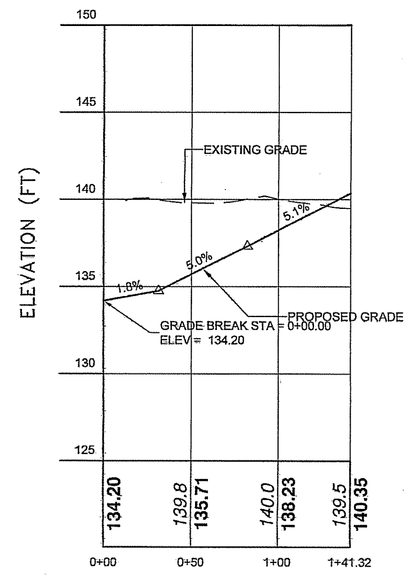

ALIGNMENT B PROFILE

SCALE: VERT. 1" = 5'
HORIZ. 1" = 50'

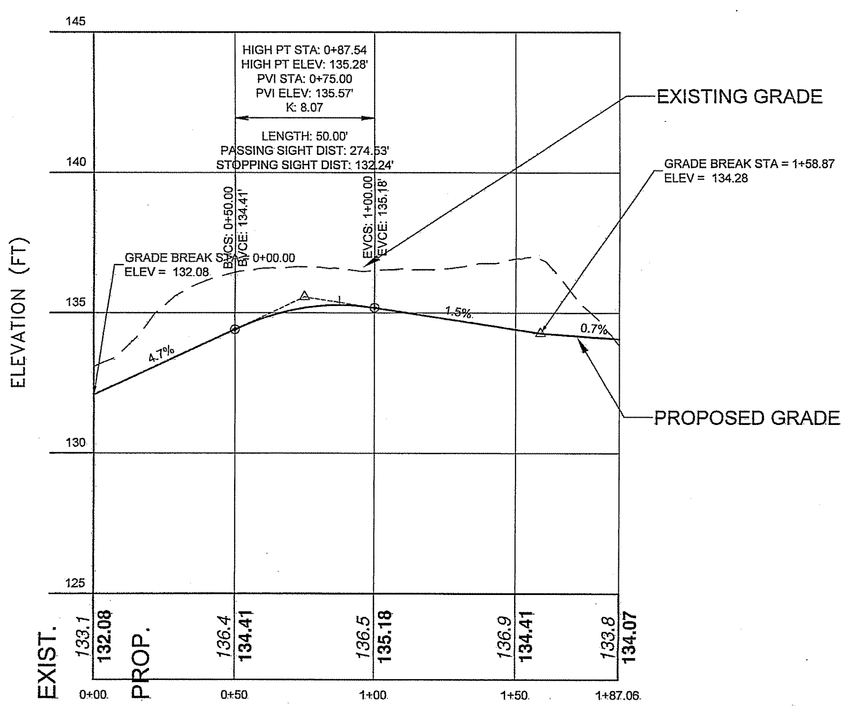

ALIGNMENT C PROFILE

SCALE: VERT. 1" = 5'
HORIZ. 1" = 50'

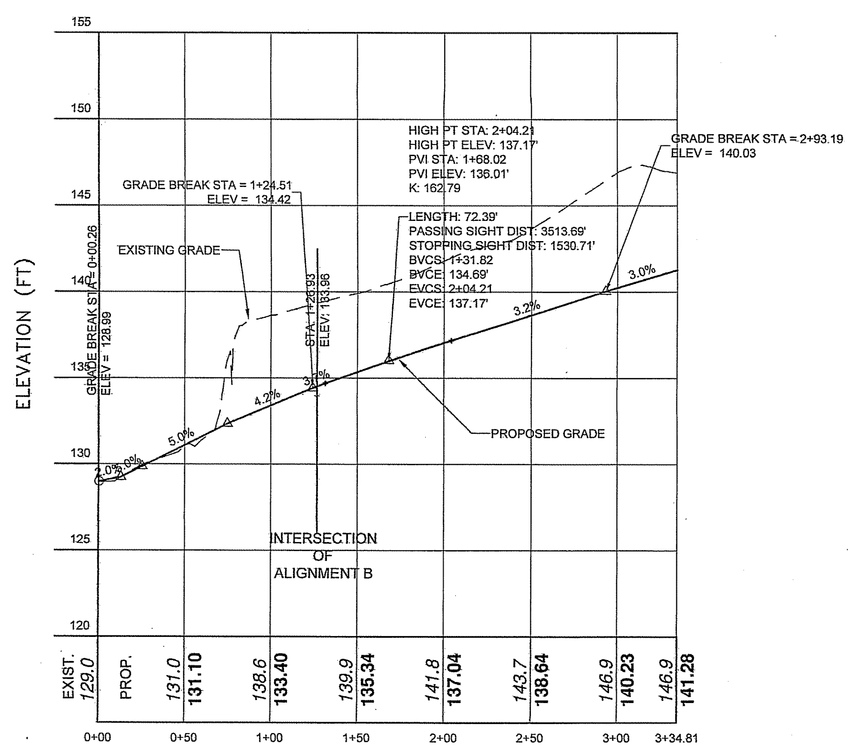

ALIGNMENT A PROFILE

SCALE: VERT. 1" = 5'
HORIZ. 1" = 50'

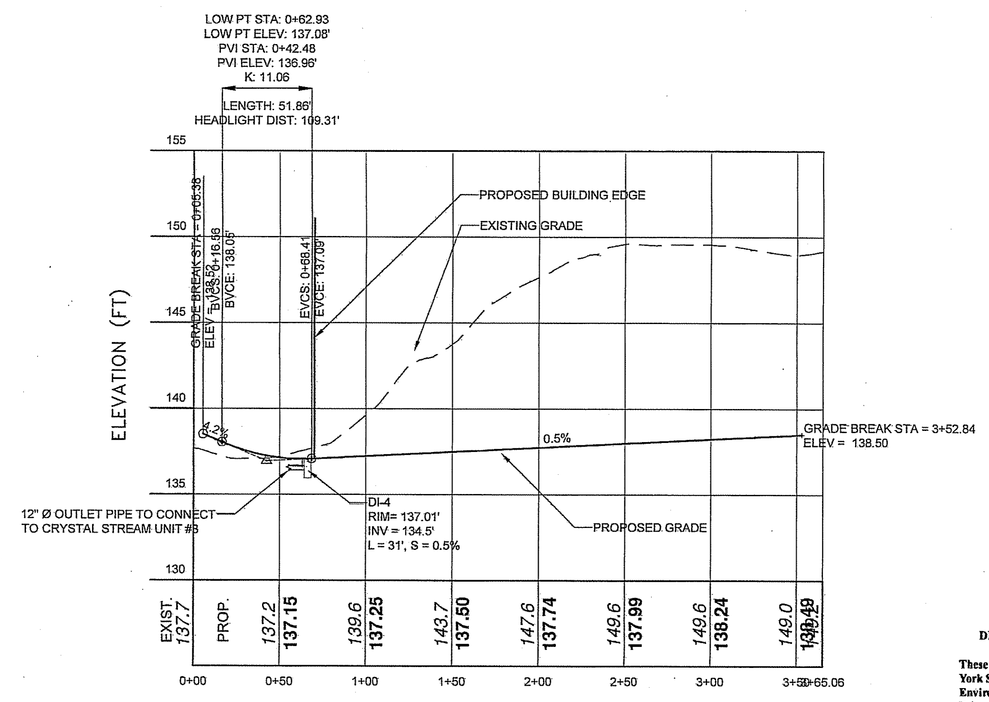

DRIVEWAY TO BLDG 6 PROFILE

SCALE: VERT. 1" = 5'
HORIZ. 1" = 50'

PUTNAM COUNTY DEPARTMENT OF HEALTH
DIVISION OF ENVIRONMENTAL HEALTH SERVICES

These plans are hereby approved pursuant to Part 5 of the New York State Sanitary Code, Article 17 of the New York State Environmental Conservation Law and Article ___ of the Putnam County Sanitary Code, subject to the provisions of the Letter of Approval issued this date. See first sheet for signature.

0 15 30 60
SCALE: 1"=30'-0"

SAFE DIG
Before You Dig, Drill or Blast!
Call811 CALL US TOLL FREE 811 or 1-800-962-7962 Mon-Fri 7:00 AM to 7:00 PM (excluding holidays) Emergency notices, but not more than two days notice. www.digsafelynewyork.com

Site Design Consultants
Civil Engineers • Land Planners
251-F Underhill Avenue, Yorktown Heights, NY 10598
(914) 962-4488 - Fax: (914) 962-7386
www.sitedesignconsultants.com

COPYRIGHT © 2012 BY SITE DESIGN CONSULTANTS, ALL RIGHTS RESERVED

PROJECT # 14-25

Engineer: STATE OF NEW YORK JOSEPH CARLO RINALDI LICENSED PROFESSIONAL ENGINEER
Joseph Carlo Rinaldi P.E.
NYS Lic. No. 64541

Revisions:

No.	Date	Comments:
1	12-3-14	Revisions per comments from B&L
2	1-14-15	Revisions per comments from B&L
3	2-10-15	Revisions per comments from B&L
4	2-10-15	Parking Schedule
5	3-13-15	Revisions per NYSDOT
6	3-23-15	Revisions per comments from B&L
7	4-23-15	Revisions per comments from DCDOH
8	4-23-15	Revisions per comments from DCDOH meeting

SCALE: NTS
DRAWN BY: EL
DATE: 10/22/14

DRIVEWAY PROFILES

SITE/SUBDIVISION PLAN
PREPARED FOR:

Butterfield Redevelopment Project

1756 NYS ROUTE 9D
Village Of Cold Spring
Putnam County, New York

C -301

F:\2014\14-25 BUTTERFIELD REDEVELOPMENT\ENGINEERING\CAD\C3D-14-25 BUTTERFIELD REDEVELOPMENT\14-25 SITE PLAN REV.4 .DWG

NOTE: UNAUTHORIZED ALTERATIONS OR ADDITIONS TO THIS DRAWING IS A VIOLATION OF SECTION 7209 (2) OF THE NEW YORK STATE EDUCATION LAW.

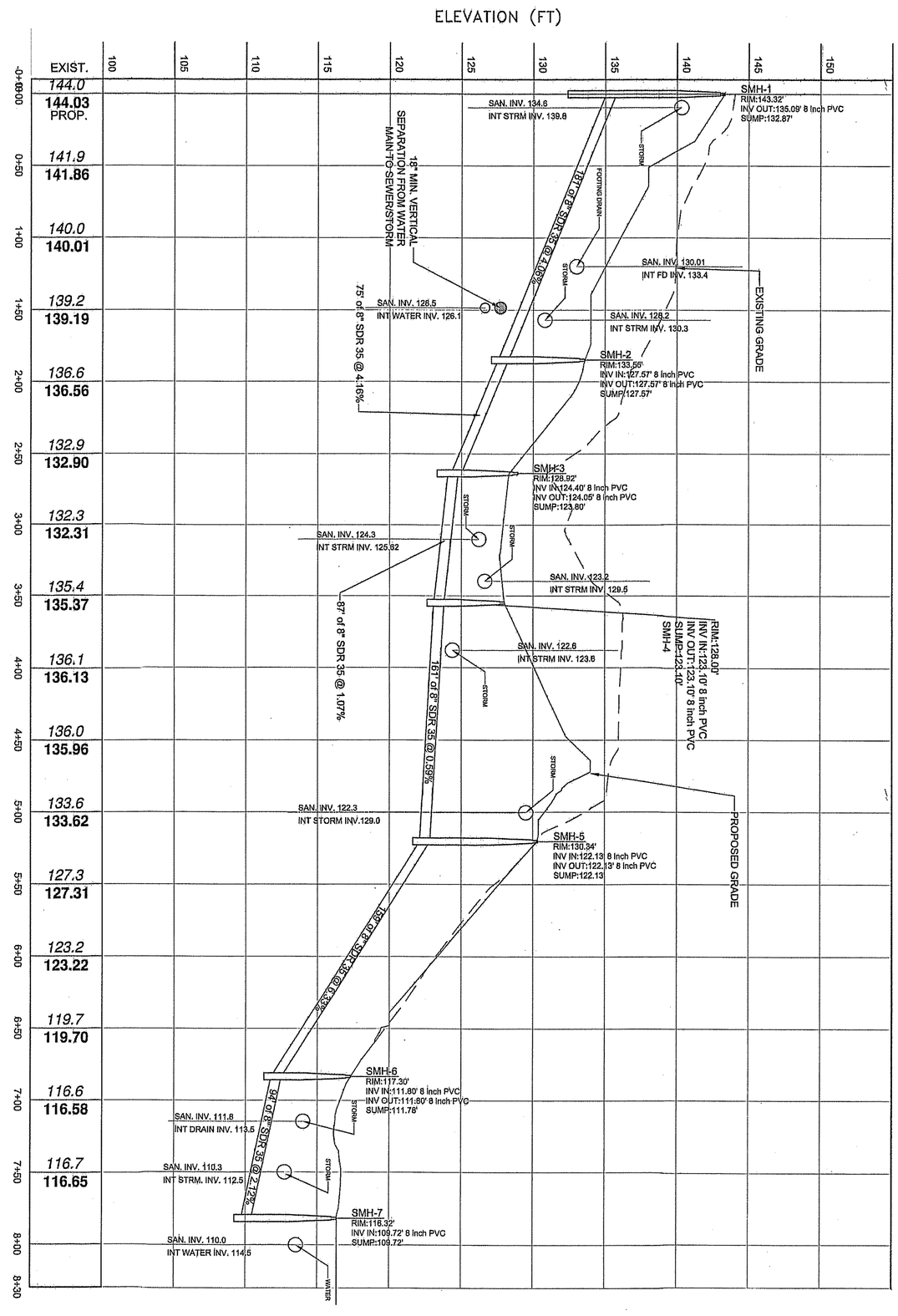

Sewer Main PROFILE
SCALE: VERT. 1" = 5'
HORIZ. 1" = 50'

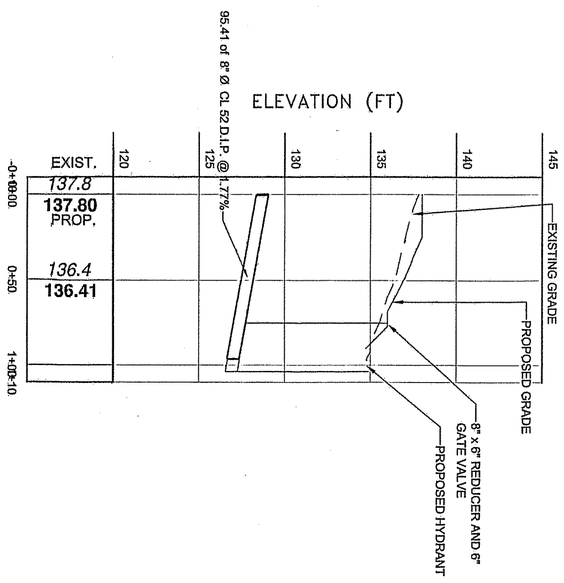

WATERMAIN PROFILE Watermain to Hydrant
SCALE: VERT. 1" = 5'
HORIZ. 1" = 50'

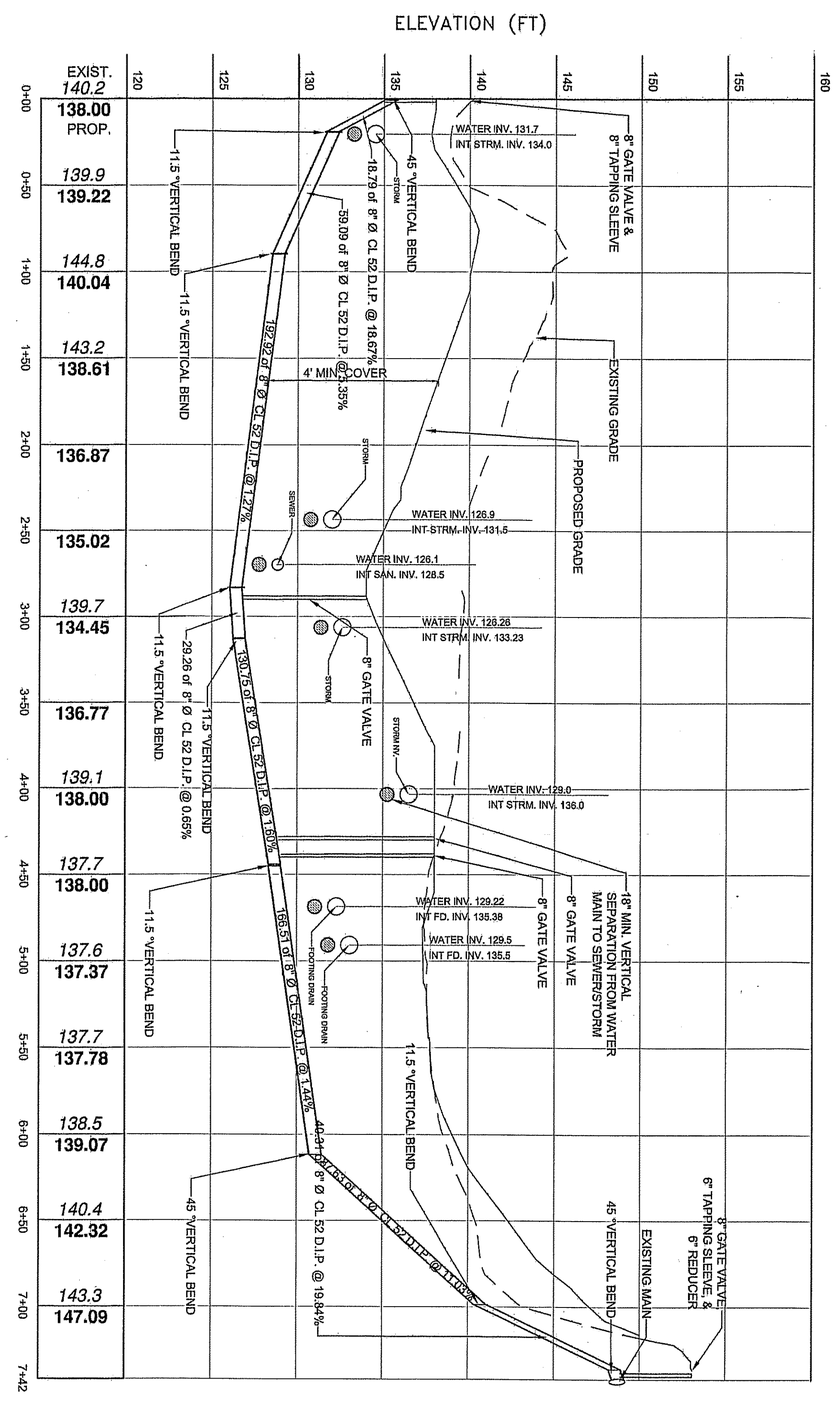

Water Main PROFILE
SCALE: VERT. 1" = 5'
HORIZ. 1" = 50'

PUTNAM COUNTY DEPARTMENT OF HEALTH
DIVISION OF ENVIRONMENTAL HEALTH SERVICES

These plans are hereby approved pursuant to Part 5 of the New York State Sanitary Code, Article 17 of the New York State Environmental Conservation Law and Article 8 of the Putnam County Sanitary Code, subject to the provisions of the Letter of Approval issued this date. See first sheet for signature.

C - 302

SITE/SUBDIVISION PLAN
PREPARED FOR

Butterfield Redevelopment Project

1756 NYS ROUTE 9D

Village Of Cold Spring — Putnam County, New York

UTILITY PROFILES

SCALE: N.T.S
DRAWN BY: EL
DATE: 10/22/14

Revisions:

No.	Date	Comments:
1	12-3-14	Revisions per comments from B&L
2	1-9-15	Revisions per comments from B&L
3	2-10-15	Revisions per comments from B&L
4	2-19-15	Parking Schedule
5	3-13-15	Revisions per NYSDOT
6	3-23-15	Revisions per comments from B&L
7	4-23-15	Revisions per comments from PCDOH
8	4-27-15	Revisions per comments from PCDOH meeting

Engineer:
STATE OF NEW YORK — JOSEPH CARLO RIINA — LICENSED PROFESSIONAL ENGINEER — NO. 64431
Joseph C. Riina, P.E.
NYS Lic. No. 64431

Site Design Consultants
Civil Engineers • Land Planners
251-F Underhill Avenue, Yorktown Heights, NY 10598
(914) 962-4488 - Fax: (914) 962-7386
www.sitedesignconsultants.com

PROJECT # 14-25

COPYRIGHT © 2012 BY SITE DESIGN CONSULTANTS, ALL RIGHTS RESERVED

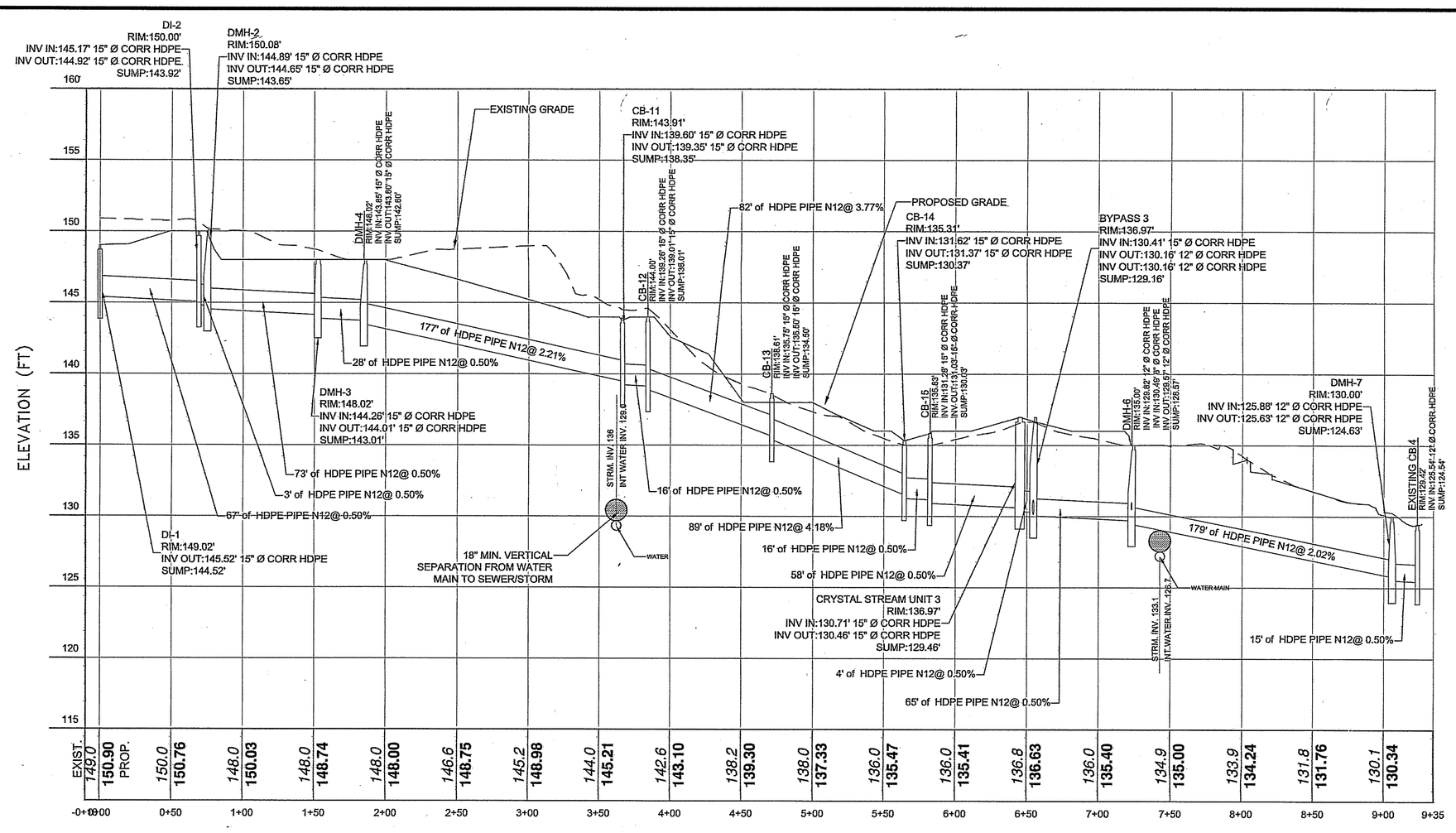

DI-4 TO EXISTING CB 4 PROFILE

SCALE: VERT. 1" = 5'
HORIZ. 1" = 50'

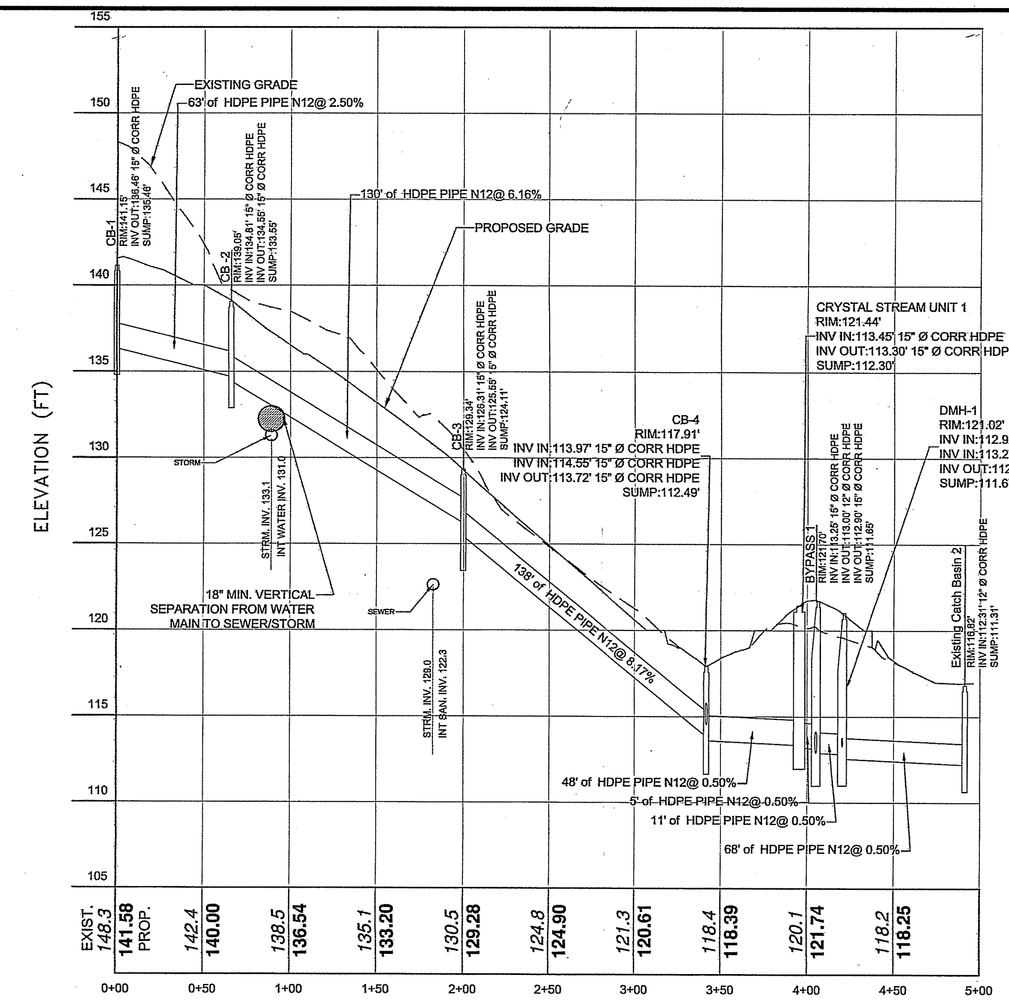

CB-1 TO EXISTING CB 2 PROFILE

SCALE: VERT. 1" = 5'
HORIZ. 1" = 50'

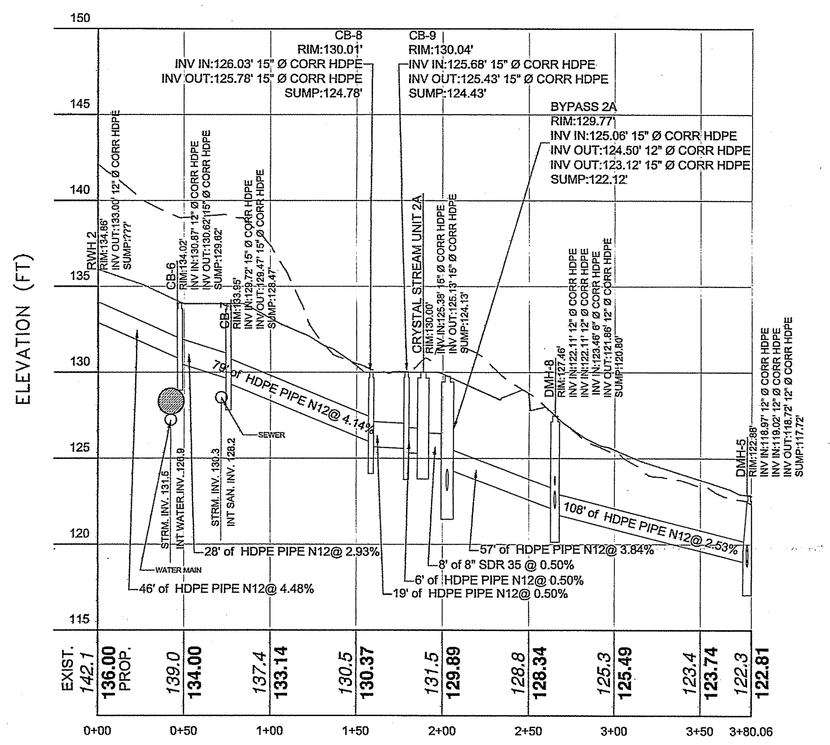

RWH 2 to DMH-5 PROFILE

SCALE: VERT. 1" = 5'
HORIZ. 1" = 50'

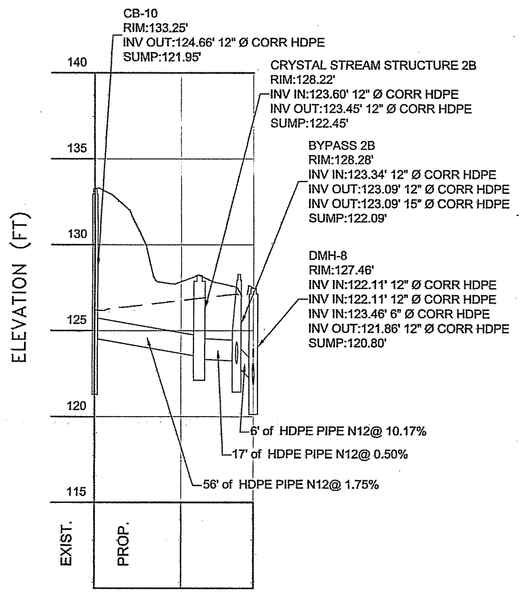

CB-10 to DMH-8 PROFILE

SCALE: VERT. 1" = 5'
HORIZ. 1" = 50'

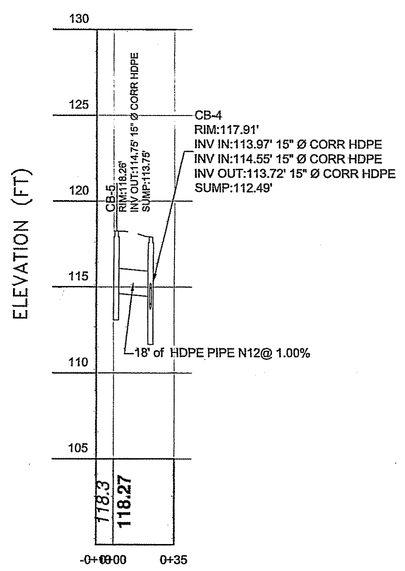

CB-5 TO CB-4 PROFILE

SCALE: VERT. 1" = 5'
HORIZ. 1" = 50'

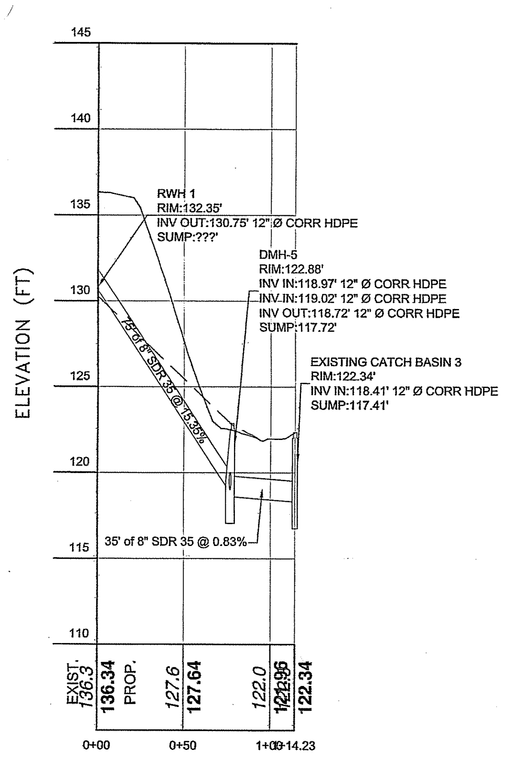

RWH-1 TO EX CB 3 PROFILE

SCALE: VERT. 1" = 5'
HORIZ. 1" = 50'

PUTNAM COUNTY DEPARTMENT OF HEALTH
DIVISION OF ENVIRONMENTAL HEALTH SERVICES

These plans are hereby approved pursuant to Part 5 of the New York State Sanitary Code, Article 17 of the New York State Environmental Conservation Law and Article ___2___ of the Putnam County Sanitary Code, subject to the provisions of the Letter of Approval issued this date. See first sheet for signature.

Site Design Consultants
Civil Engineers • Land Planners
251-F Underhill Avenue, Yorktown Heights, NY 10598
(914) 962-4488 - Fax: (914) 962-7386
www.sitedesignconsultants.com

PROJECT # 14-25

COPYRIGHT © 2012 BY SITE DESIGN CONSULTANTS, ALL RIGHTS RESERVED

STATE OF NEW YORK • JOSEPH CARLO RINA • 071 • LICENSED PROFESSIONAL ENGINEER

Engineer: Joseph C. Carlino P.E.
NY Lic. No. 0431

Revisions:

No.	Date	Comments:
1	12-3-14	Revisions per comments from B&L
2	2-10-15	Revisions per comments from B&L
3	2-10-15	Revisions per comments from B&L
4	2-19-15	Parking Schedule
5	3-13-15	Revisions per NYSDOT
6	3-23-15	Revisions per comments from B&L
7	4-27-15	Revisions per comments from PCDOH
8	4-27-15	Revisions per comments from PCDOH meeting

SCALE: N.T.S
DRAWN BY: EL
DATE: 10/22/14

STORM WATER PROFILES

SITE/SUBDIVISION PLAN
PREPARED FOR

Butterfield Redevelopment Project

1756 NYS ROUTE 9D
Putnam County, New York
Village Of Cold Spring

C - 303

E:\2014\14-25 BUTTERFIELD REDEVELOPMENT\ENGINEERING\CAD\CD\14-25 BUTTERFIELD REDEVELOPMENT\14-25 SITE PLAN REV 4.DWG

NOTE: UNAUTHORIZED ALTERATIONS OR ADDITIONS TO THIS DRAWING IS A VIOLATION OF SECTION 7209 (2) OF THE NEW YORK STATE EDUCATION LAW.

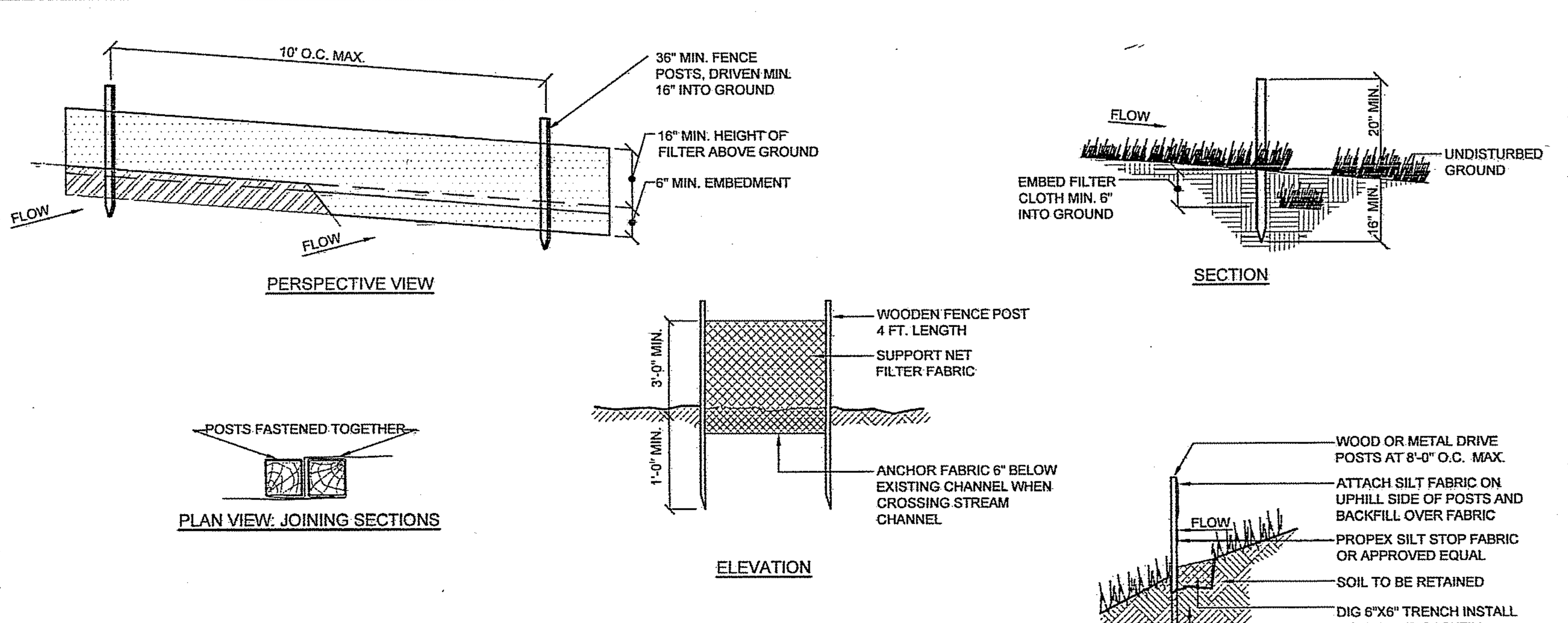

NOTES:
1. Filter cloth to be fastened securely to post: steel either t or u type or 2" hardwood posts at top and mid section.
2. When two sections of filter cloth adjoin each other they shall be overlapped by 6 inches and folded. Filter cloth shall be mirafi 100x, stabilinka t140n or approved equal
3. Maintenance shall be performed as needed and material removed when "bulges" develop in the silt fence.
4. Excavate 4 inch trench along the lower perimeter of the site.
5. Unroll a section at a time and position the post against the back (downstream) wall of the trench (net side away from direction of flow).
6. Drive the post into the ground until the netting is approximately 2 inches from the trench bottom.
7. Lay the toe-in flap of fabric onto the undisturbed bottom of the trench, backfill the trench and tamp the soil. Steeper slopes require an intercept trench.
8. Join sections as shown above.

SYMBOL

E-1 SILT FENCE DETAIL
NOT TO SCALE

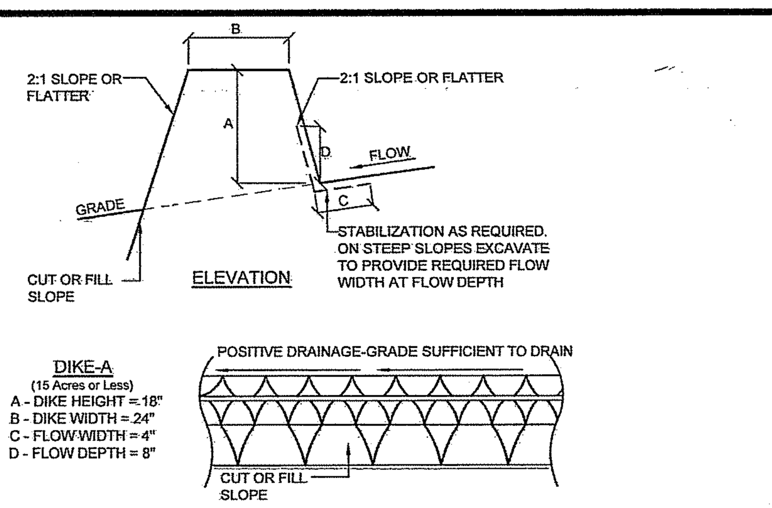

DIKE-A
(15 Acres or Less)
A - DIKE HEIGHT = 18"
B - DIKE WIDTH = 24"
C - FLOW WIDTH = 4"
D - FLOW DEPTH = 8"

CONSTRUCTION SPECIFICATIONS:
1. All dikes shall be compacted by earth-moving equipment.
2. All dikes shall have positive drainage to an outlet.
3. Top width may be wider and side slopes be flatter if desired to facilitate crossing by construction traffic.
4. Field location should be adjusted as needed to utilized a stabilized safe outlet.
5. Earth dikes shall have an outlet that functions with minimum of erosion. Runoff shall be conveyed to a sediment trapping device such as a sediment basin or trap where either the dike channel or the drainage area above the dike are not adequately stabilized.
6. Stabilization shall be: (a) in accordance with standard specifications for seed and straw mulch if not in seeding season. (b) flow channel as per the chart below.

FLOW CHANNEL STABILIZATION

TYPE OF TREATMENT	TYPE OF GRADE	DIKE - A
1	0.5 - 3.0%	seed & straw mulch

A) Stone to be 2 inch stone or recycled concrete equivalent. In a layer at least 3 nches in thickness and be pressed into the soil with construction equipment.
B) rip-rap to be 4-8 inches in a layer at least 8 inches thickness and pressed into the soil.
C) approved equivalents can be substituted for any of the above materials.
7. Periodic inspection and required maintenance must be provided after each rain fall.

E-4 EARTH DIKE DETAIL
NOT TO SCALE

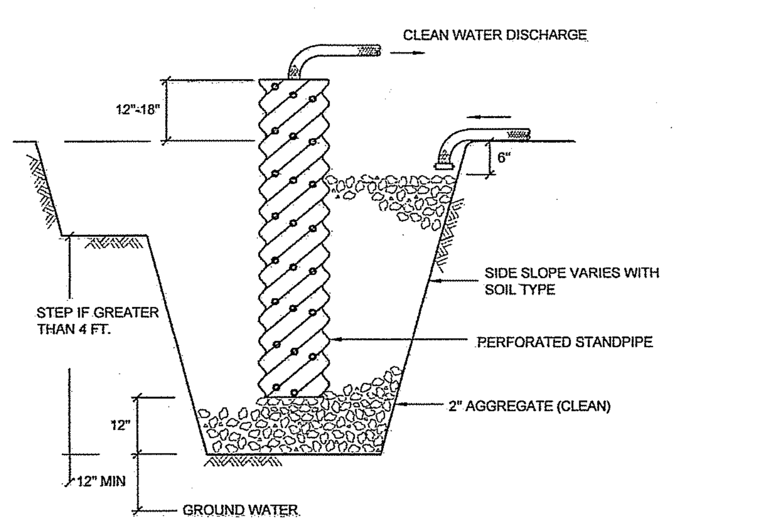

INSTALLATION NOTES:
1. Pit dimensions are variable.
2. The standpipe should be a perforated 12" to 24" diameter corrugated metal, PVC or HDPE pipe.
3. A base of 2" clean aggregate should be placed in the pit to a depth of 12". After installing the standpipe, the pit surrounding the standpipe should then be backfilled with 2" aggregate.
4. The standpipe should extend 12" - 18" above the lip of the pit.
5. If discharge will be pumped directly to a storm drainage system, the standpipe should be wrapped with filter fabric before installation. If desired, 1/4" - 1/2" hardware cloth may be placed around the standpipe, prior to attaching the filter fabric, this will increase the rate of water seepage into the pipe.
6. The contractor shall comply with all prevailing laws for safety during trenching.

E-8 DEWATERING PIT DETAIL
NOT TO SCALE

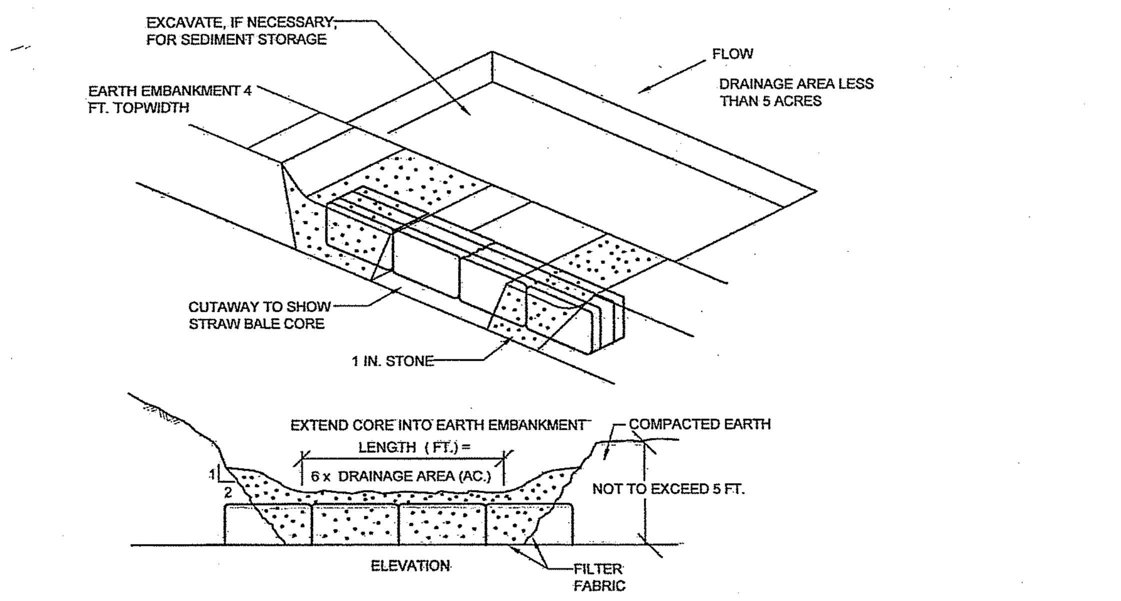

INSTALLATION NOTES:
1. Area under embankment shall be cleared, grubbed, and stripped of any vegetation and root mat. The pool area shall be cleared as well.
2. The fill material for the embankment shall be free of roots or other woody vegetation as well as over sized stones, rocks, organic material and other questionable material. The embankment shall be compacted by traversing with equipment while it is being constructed.
3. Sediment shall be removed and trap restored to its original dimensions when the sediment has accumulated to 1/2 the design depth of the trap. Removed sediment shall be deposited in a suitable area and in such a manner that it will not erode.
4. The structure shall be inspected after each rain and repairs made as needed.
5. Construction operations shall be carried out in such a manner that erosion and water pollution is minimized.
6. The structure shall be removed and the area stabilized when the drainage area has been properly stabilized.
7. All cut and fill slopes shall be 1 : 2 or flatter.

E-9 STONE OUTLET SEDIMENT TRAP DETAIL
NOT TO SCALE

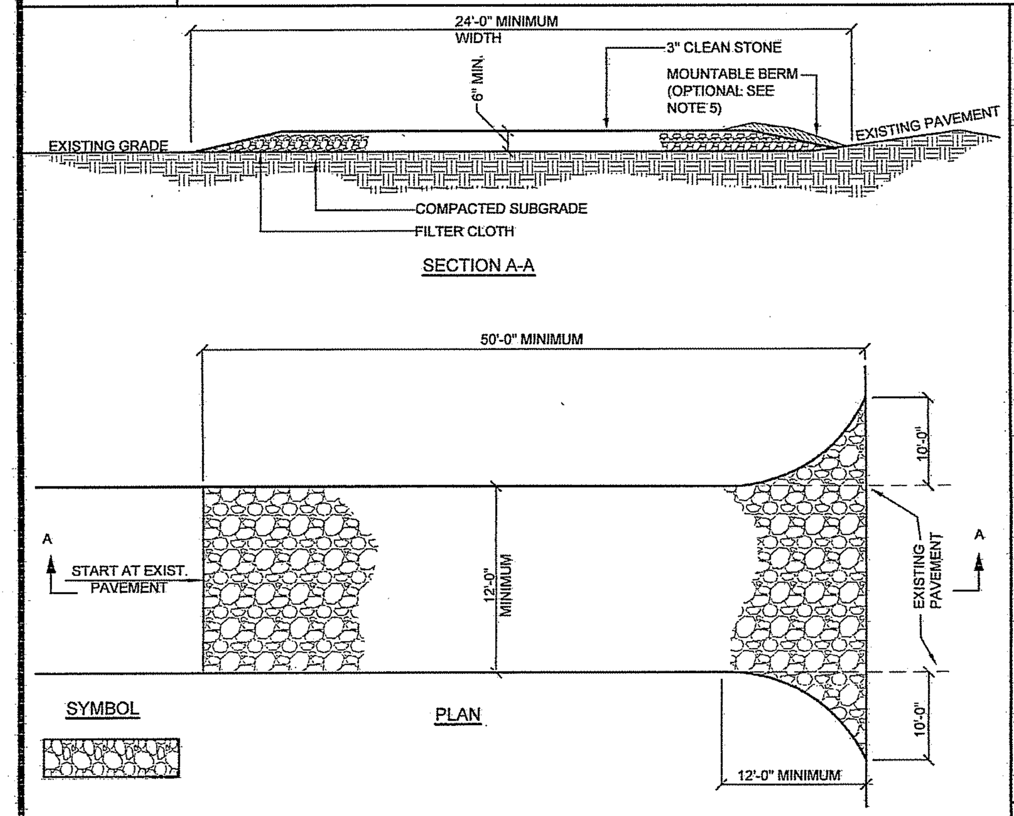

INSTALLATION NOTES:
1. Stone size - use 3" min. Stone, or reclaimed or recycled concrete equivalent.
2. Length - as required, but not less than 50 feet (except on a single residence lot where a 30 foot minimum length would apply.
3. Thickness - not less than six (6) inches.
4. Width - 12 foot minimum, but not less than the full width at points where ingress or egress occur. 24 ft if single entrance to site.
5. Surface water - all surface water flowing or diverted toward construction entrances shall be piped across the entrance. If piping is impractical, a mountable berm with 5:1 slopes will be permitted.
6. Maintenance - the entrance shall be maintained in a condition which will prevent tracking or flowing of sediment onto public right of way this may require periodic top dressing with additional stone as conditions demand and repair and/or cleanouts of any measures used to trap sediment. All sediment spilled, dropped, washed or tracked onto public right of way must be removed immediately.
7. Washing - wheels shall be cleaned to remove sediment prior to entrance onto public right of way. When washing is required, it shall be done on an area stabilized with stone and which drains into an approved sediment trapping device.
8. Periodic inspection and needed maintenance shall be provided after each rain

E-2 STABILIZED CONSTRUCTION ENTRANCE DETAIL
NOT TO SCALE

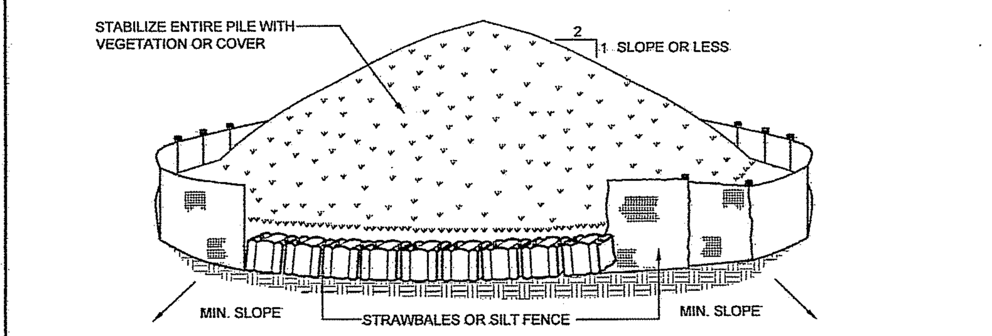

NOTES:
1. Area chosen for stockpiling operations shall be dry and stable.
2. Maximum slope of stockpile shall be 1:2.
3. Upon completion of soil stockpiling, each pile shall be surrounded with either silt fencing or strawbales, then stabilized with vegetation or covered.
4. See detail for installation of silt fence.

SYMBOL

E-5 SOIL STOCKPILE DETAIL
NOT TO SCALE

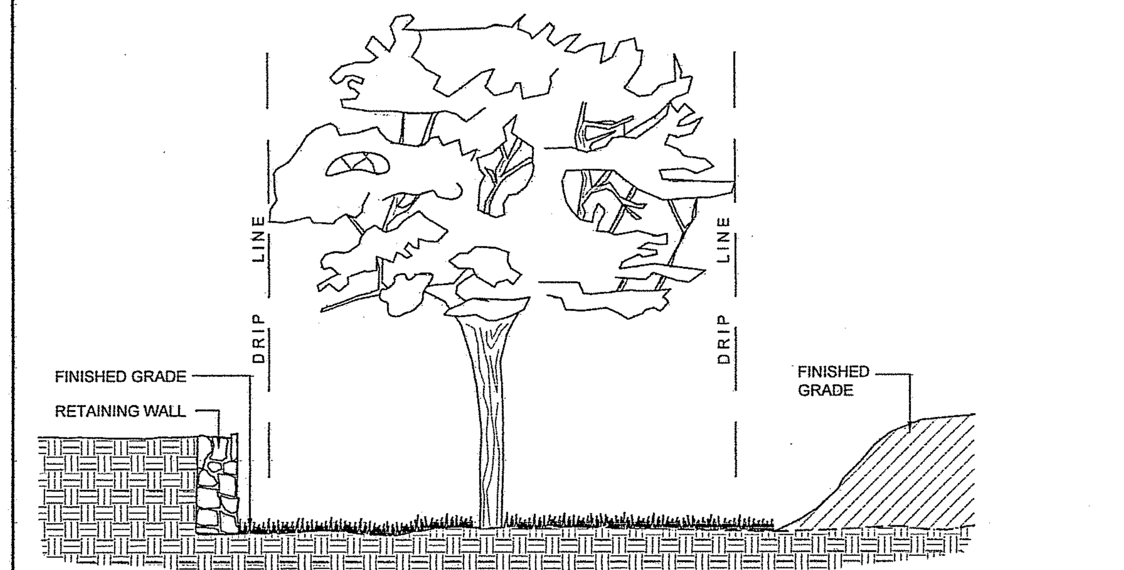

E-10 TREE PROTECTION PLAN FOR GRADE CHANGE DETAIL
NOT TO SCALE

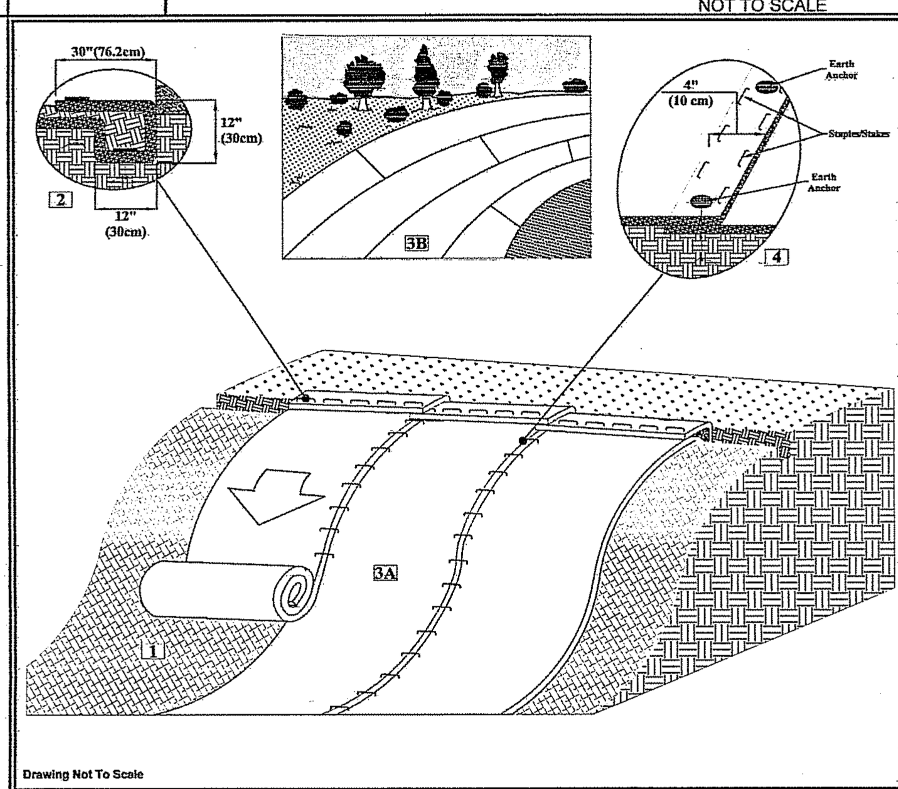

Drawing Not To Scale

Tensar | NORTH AMERICAN GREEN
5401 St. Wendel - Cynthiana Rd. Poseyville, IN 47633 PH: 800-772-2040 www.tensarnagreen.com
Drawn on: 01-28-13

SLOPE INSTALLATION EARTH ANCHOR (EA) DETAIL
1. Prepare soil before installing high-performance turf reinforcement mats (HP-TRMs), including any necessary application of lime, fertilizer, and seed.
2. Begin at the top of the slope by anchoring the HP-TRMs in a 12" (30 cm) deep x 12" (30cm) wide trench with approximately 30" (76.2 cm) of HP-TRMs extended beyond the up-slope portion of the trench. Anchor the HP-TRMs with an alternating row of staples and anchors approximately 30" (76.2 cm) apart in the bottom of the trench. Backfill and compact the trench after stapling. Fold remaining 30" (76.2 cm) portion of HP-TRMs back over compacted soil. Secure HP-TRMs over compacted soil with an alternating row of staples/anchors spaced approximately 18" (45 cm) apart across the width of the HP-TRMs.
3. Roll the HP-TRMs (A) down or (B) horizontally across the slope. HP-TRMs will unroll with appropriate side against the soil surface. All HP-TRMs must be securely fastened to soil surface by placing staples/anchors in appropriate locations as shown in the staple pattern guide.
4. The edges of parallel HP-TRMs must be stapled between earth anchors with approximately 4" (10 cm) overlap depending on the HP-TRM type. For curved sections, adjust the overlap edges of parallel HP-TRMs accordingly with a minimum of 4" (10 cm) overlap to accommodate transitional segments.

*NOTE: In loose soil conditions, the use of staple or stake lengths greater than 6"(15cm) may be necessary to properly secure the HP-TRMs.

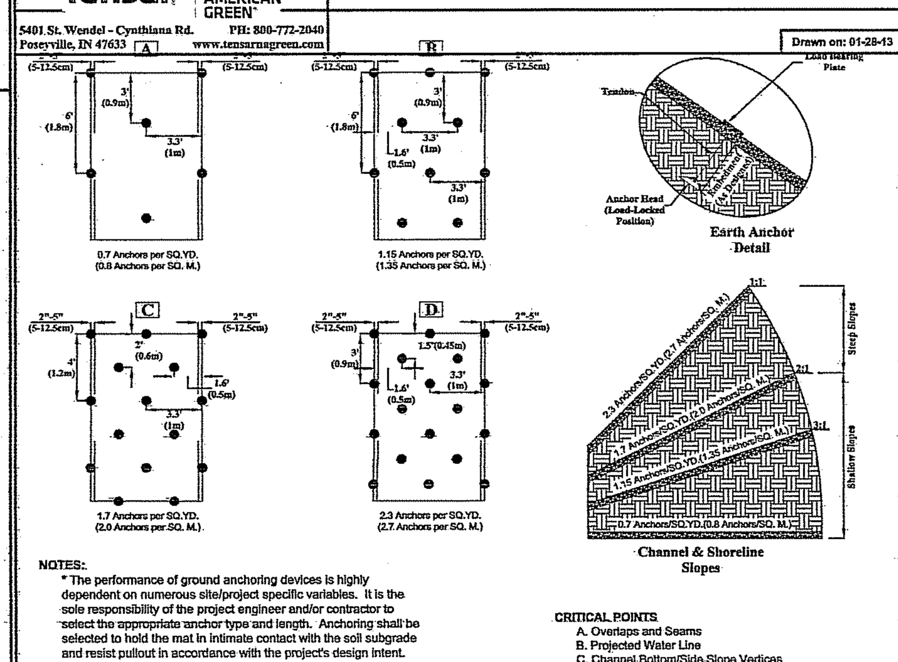

NOTES:
* The performance of ground anchoring devices is highly dependent on numerous site/project specific variables. It is the sole responsibility of the project engineer and/or contractor to select the appropriate anchor type and length. Anchoring shall be selected to hold the mat in intimate contact with the soil subgrade and resist pullout in accordance with the project's design intent.
* Anchor Pattern Guide can vary based on earth anchor and blanket selection.
* If desired, the system can be soil-filled and sodded after TRM installation. Sod should be staples/staked according to plan specifications.

SLOPE INSTALLATION EARTH ANCHOR (EA) DETAIL
1. Prepare soil before installing high-performance turf reinforcement mats (HP-TRMs), including any necessary application of lime, fertilizer, and seed.
2. Begin at the top of the slope by anchoring the HP-TRMs in a 6" (15 cm) deep x 6" (15cm) wide trench with approximately 12" (30 cm) of HP-TRMs extended beyond the up-slope portion of the trench. Anchor the HP-TRMs with a row of staples and anchors approximately 12" (30 cm) apart in the bottom of the trench. Backfill and compact the trench after stapling. Apply seed to compacted soil and fold remaining 12" (30 cm) portion of HP-TRMs back over seed and compacted soil. Secure HP-TRMs over compacted soil with a row of staples/stakes spaced approximately 12" (30 cm) apart across the width of the HP-TRMs.
3. Roll the HP-TRMs (A) down or (B) horizontally across the slope. HP-TRMs will unroll with appropriate side against the soil surface. All HP-TRMs must be securely fastened to soil surface by placing staples/stakes in appropriate locations as shown in the staple pattern guide.
4. The edges of parallel HP-TRMs must be stapled with approximately 2" - 5" (5-12.5cm) overlap depending on the HP-TRM type.
5. Consecutive HP-TRMs spliced down the slope must be end over end (Shingle style) with an approximate 3"(7.5cm) overlap. Staple through overlapped area, approximately 12"(30cm) apart across entire HP-TRM width.

*NOTE: In loose soil conditions, the use of staple or stake lengths greater than 6"(15cm) may be necessary to properly secure the HP-TRMs.

Drawing Not To Scale

Tensar | NORTH AMERICAN GREEN
5401 St. Wendel - Cynthiana Rd. Poseyville, IN 47633 PH: 800-772-2040 www.tensarnagreen.com

Disclaimer: The information presented herein is general design information only. For specific applications, consult an independent professional for further design guidance.
Drawn on: 01-28-13

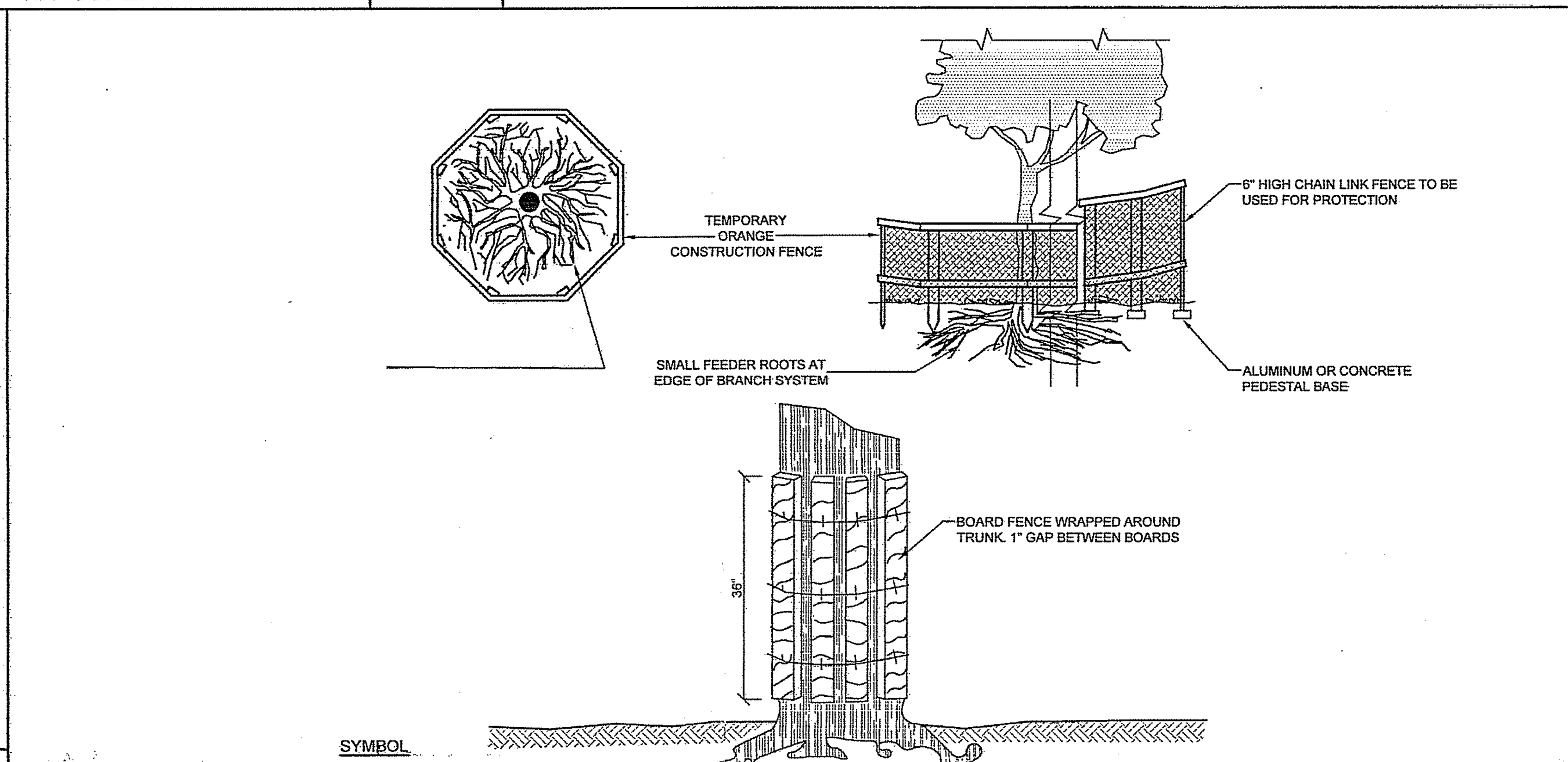

NOTES:
1. Contractor shall use the tree trunk armor detail for isolated trees that require protection.
2. As an alternate, the contractor may protect trees in the vicinity of regular heavy traffic / construction areas or clusters of trees to be protected as per the construction fence detail.

E-11 TREE TRUNK ARMOR / TREE PROTECTION DETAIL
NOT TO SCALE

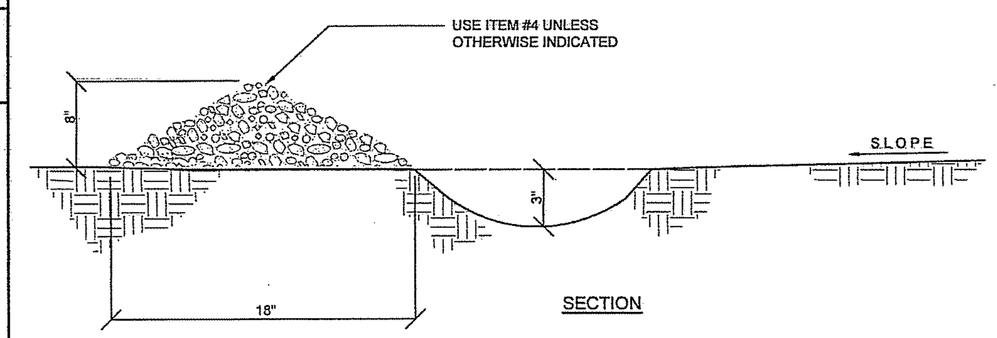

INSTALLATION NOTES:
1. Install the water bar as soon as the right of way is cleared and graded.
2. Disk or strip the sod from the base for the constructed ridge before placing fill.
3. Track the ridge to compact it to the design cross section.
4. The outlet shall be located on an undisturbed area. Field spacing will be adjusted to use the most stable outlet areas. Outlet protection will be provided when natural areas are not adequate.
5. Vehicle crossing shall be stabilized with gravel. Exposed areas shall be immediately seeded and mulched.
6. Periodically inspect water bars for erosion damage and sediment. Check outlet areas and make repairs as needed to restore operation.
7. Item #4 shall be used for the installation of the water bar.

SYMBOL
— W B —

E-6 WATER BAR DETAIL
NOT TO SCALE

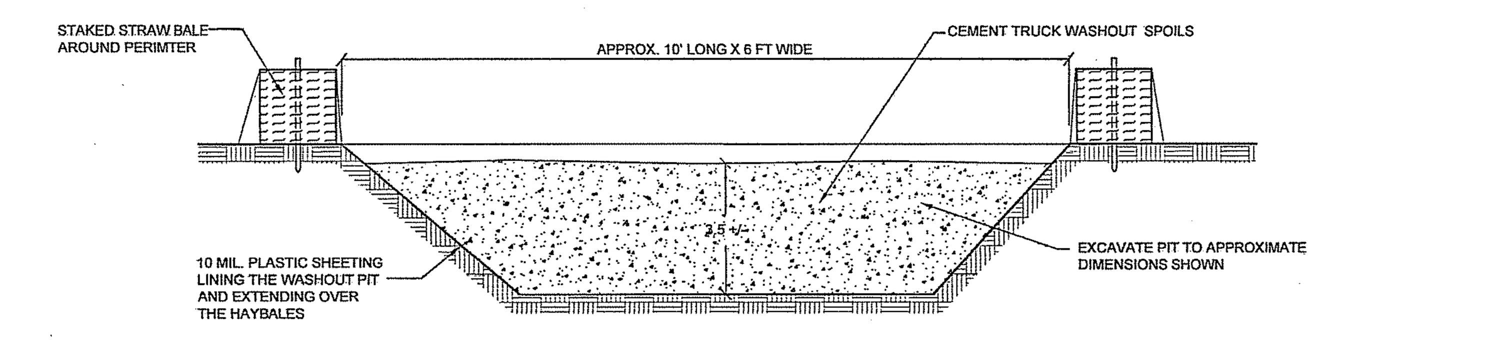

NOTE:
1. Upon hardening of washout concrete residual, material may be left in place and broken up and buried or broken up for removal and disposal.
2. Once the washout material reaches 6" from the surface, a new pit should be created for additional washout concrete residual.
3. The washout pit shall be located at least 50 ft. from storm drains, open ditches,or waterbodies.
4. Inspections shall be made daily. When 75% capacity has been reached a determination shall be made as to whether materials shall be removed. Upon removal and disposal of materials the liner shall be checked for tears. If so liner shall be replaced. Liquids shall be shall be removed by pumping out and disposed of in a proper manner. Solid washout waste can be broken up and buried on site or disposed of off site.

E-12 CEMENT TRUCK WASHOUT PIT DETAIL
NOT TO SCALE

PUTNAM COUNTY DEPARTMENT OF HEALTH
DIVISION OF ENVIRONMENTAL HEALTH SERVICES

These plans are hereby approved pursuant to Part 5 of the New York State Sanitary Code, Article 17 of the New York State Environmental Conservation Law and Article 8 of the Putnam County Sanitary Code, subject to the provisions of the Letter of Approval issued this date. See first sheet for signature.

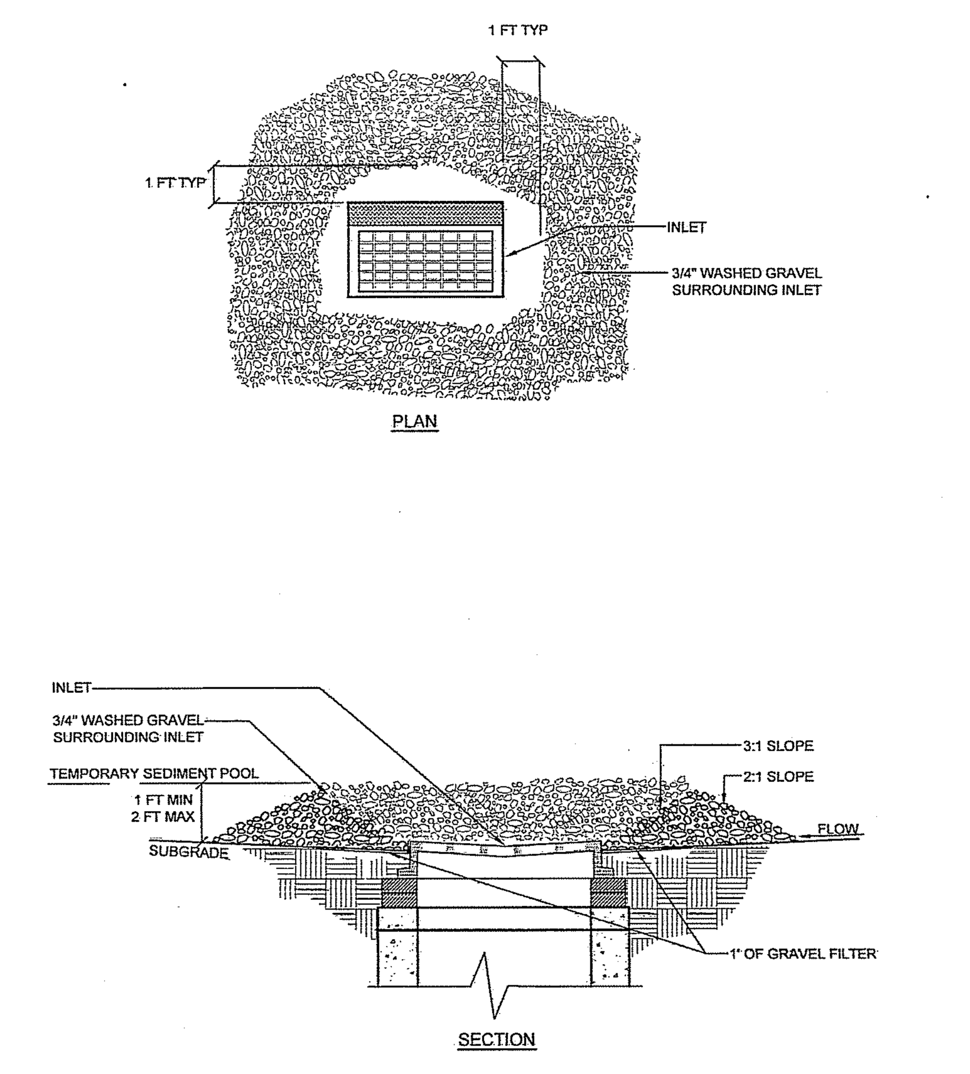

E-3 INLET PROTECTION DETAIL
NOT TO SCALE

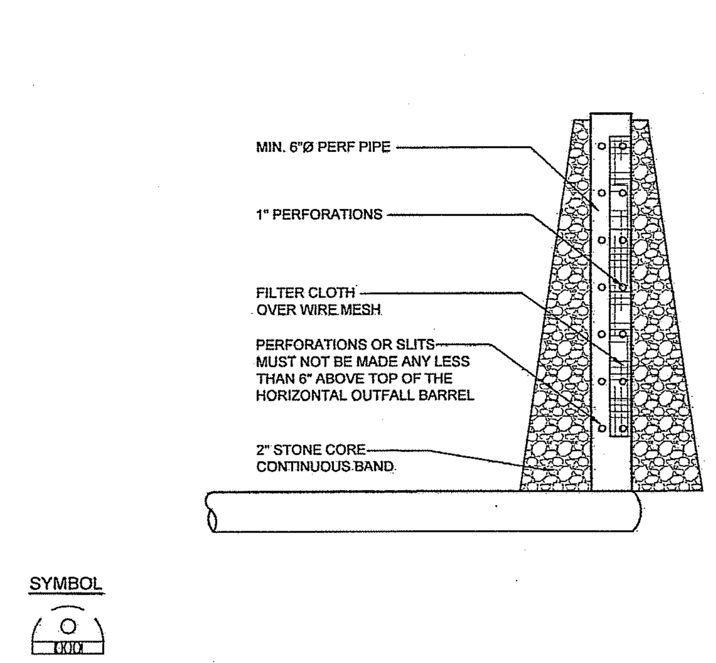

E-7 TEMPORARY SEDIMENT BASIN OUTLET DETAIL
NOT TO SCALE

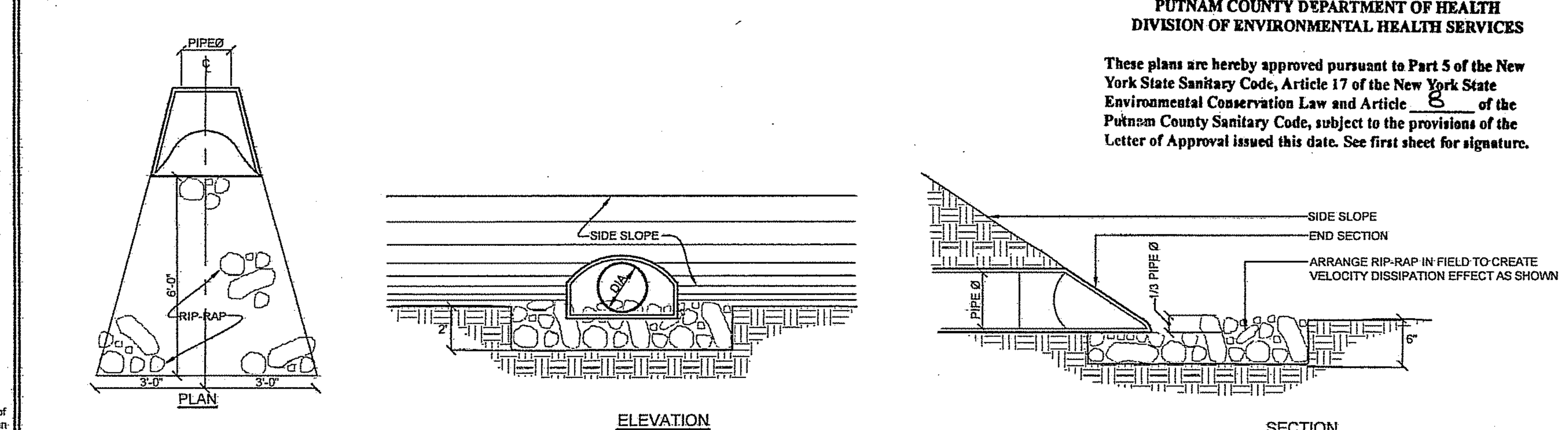

E-13 RIP-RAP APRON/ENERGY DISSIPATOR DETAIL
NOT TO SCALE

Site Design Consultants
Civil Engineers • Land Planners
251-F Underhill Avenue, Yorktown Heights, NY 10598
(914) 962-4488 - Fax: (914) 962-7386
www.sitedesignconsultants.com

PROJECT # 14-25

Engineer:
STATE OF NEW YORK · JOSEPH CARLO RIINA · LICENSED PROFESSIONAL ENGINEER · NO. 64431
Joseph C. Riina, P.E.
NYS Lic. No. 64431

Revisions:

No.	Date	Comments:
1	12-3-14	Revisions per comments from B&L
2	1-9-15	Revisions per comments from B&L
3	2-10-15	Revisions per comments from B&L
4	2-19-15	Parking Schedule
5	3-13-15	Revisions per NYSDOT
6	3-23-15	Revisions per comments from B&L
7	4-23-15	Revisions per comments from PCDOH
8	4-27-15	Revisions per comments from PCDOH meeting

SCALE: NTS
DRAWN BY: EL
DATE: 10/22/14

EROSION AND SEDIMENT CONTROL DETAILS

SITE/SUBDIVISION PLAN
PREPARED FOR
Butterfield Redevelopment Project
1756 NYS ROUTE 9D
Village Of Cold Spring
Putnam County, New York

Sheet C-501

COPYRIGHT © 2012 BY SITE DESIGN CONSULTANTS, ALL RIGHTS RESERVED

NOTE: UNAUTHORIZED ALTERATIONS OR ADDITIONS TO THIS DRAWING IS A VIOLATION OF SECTION 7209 (2) OF THE NEW YORK STATE EDUCATION LAW.

F:\2014\14-25 BUTTERFIELD REDEVELOPMENT\ENGINEERING\CAD\C3D-14-25 BUTTERFIELD REDEVELOPMENT\14-25_DETAILS UPDATED.DWG

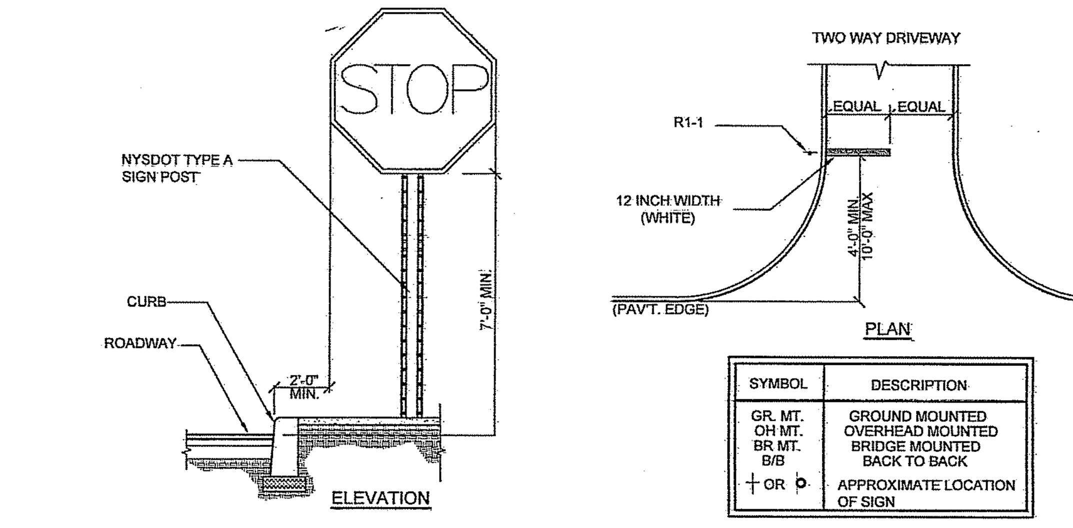

SYMBOL	DESCRIPTION
GR. MT.	GROUND MOUNTED
OH MT.	OVERHEAD MOUNTED
BR MT.	BRIDGE MOUNTED
B/B	BACK TO BACK
┼ OR ȯ	APPROXIMATE LOCATION OF SIGN

TYPICAL INSTALLATION GUIDELINES

SIGN	M.U.T.C.D. NUMBER	SIZE OF SIGN	TYPE OF MOUNT
STOP	R1-1	18" X 18"	GR. MT.
RESERVED PARKING	R7-8	12" X 18"	GR. MT.
BACK IN PARKING ONLY	R7-7	12" X 18"	GR. MT.

SIGN	M.U.T.C.D. NUMBER	SIZE OF SIGN	TYPE OF MOUNT
DO NOT ENTER EXIT ONLY	R7-2	12" X 18"	GR. MT.
ENTER ONLY	R7-3	12" X 18"	GR. MT.
ONE WAY	R6-2	12" X 18"	GR. MT.

SIGN	M.U.T.C.D. NUMBER	SIZE OF SIGN	TYPE OF MOUNT
ADA ROUTE	R7-9a	12" X 18"	GR. MT.
ADA ROUTE	R7-9b	12" X 18"	GR. MT.
ADA ROUTE	R7-9c	12" X 18"	GR. MT.
STOP HERE FOR PEDESTRIANS	R1-5b	12" X 18"	GR. MT.

GENERAL NOTES:
1. All signage shall be in accordance with the latest edition of the national MUTCD and the N.Y.S Supplement (MUTCD), September 2007, including the following:
   A. Letter size and series
   B. Legend and background color
   C. Reflectivity
   D. Size of sign
2. The type of characters as specified in the standard specifications shall be as follows:

MUTCD CODE LETTER	TYPE OF CHARACTER
G.I.	TYPE IV
R.P.W.M.	TYPE IV OR V.

3. Sign locations as shown on plans are approximate. The Contractor shall relocate existing signs and install new signs in accordance with the MUTCD, latest edition. The Contractor shall contact the Town Engineer to discuss/resolve problem areas.
4. Except where otherwise specified, parking signs shall be placed facing approaching traffic at an angle of between 30 and 45 degrees with the line of traffic flow. Parking signs shall be placed at each end of a regulation (single-headed arrows) and, within the regulation (double-headed arrows), at intervals not to exceed 200 ft
5. Where new signs are installed the Contractor shall affix a label to the back of the sign panel. This label will show the date of installation and identification numbers.
6. Placement of W3-17 sign is prescribed in the General Municipal Law.

R-1 TRAFFIC SIGN DETAIL
NOT TO SCALE

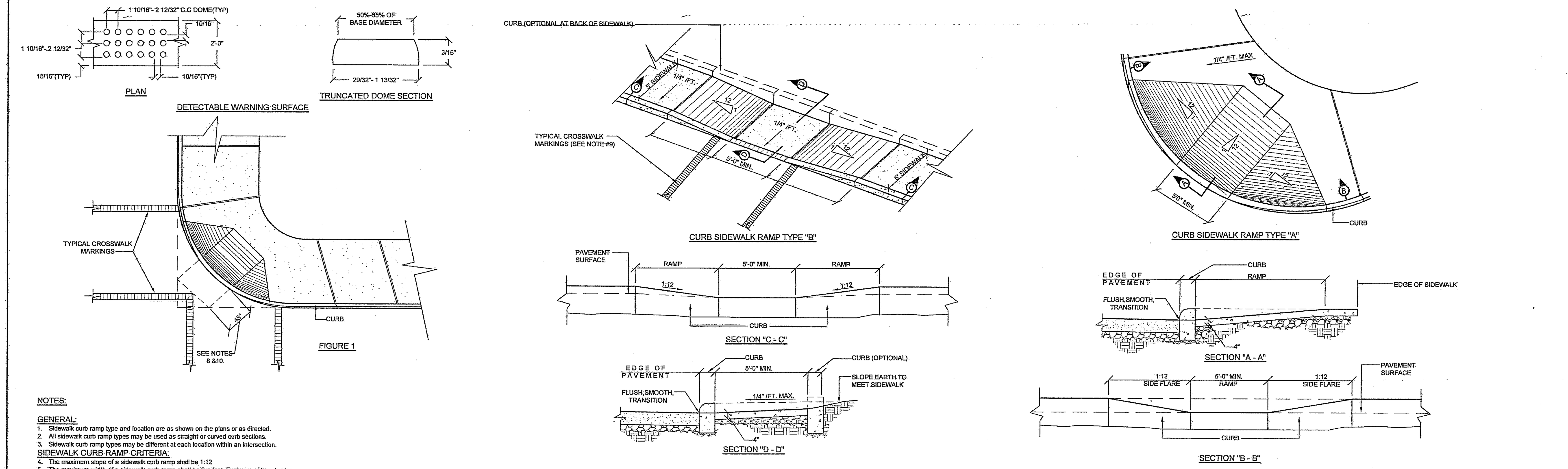

NOTES:

GENERAL:
1. Sidewalk curb ramp type and location are as shown on the plans or as directed.
2. All sidewalk curb ramp types may be used as straight or curved curb sections.
3. Sidewalk curb ramp types may be different at each location within an intersection.

SIDEWALK CURB RAMP CRITERIA:
4. The maximum slope of a sidewalk curb ramp shall be 1:12
5. The maximum width of a sidewalk curb ramp shall be five feet. Exclusive of flared sides.
6. All sidewalk curb ramps shall have flush, smooth transitions to the adjacent street or highway surface.
7. For NYSDOT curb ramps from a state highway shall not exceed the maximum 2% cross-slope.

SURFACE FINISH:
8. The surface of all sidewalk curb ramps shall be stable, firm, and slip resistant (E.G. A coarse broom finish perpendicular to the ramp slope is acceptable on cement concrete curb ramps.)
9. All proposed sidewalk curb ramps shall have a detectable warning surface installed from the back of the curb for a distance of 2 feet in the direction of travel on the ramp and extending the full width of the ramp, excluding the ramp sides or flares. The detectable warning surface shall comply with the requirements of section 4.29.2 of the Americans with Disabilities Act accessibility guidelines (ADAAG).

SIDEWALK CURB RAMP PLACEMENT:
10. At a corner, where the curb radius is 25-feet or less, a single ramp (either type a or b) located diagonally can often serve crosswalks in two directions. However, a single ramp shall only be used where there is a minimum clear space of 48" falling entirely within the projection of the intersection curbs (see figure 1). Where the radius exceeds 25' or the minimum 48" clear space is not achievable, then separate ramps should be provided for each crosswalk.

PAVEMENT MARKINGS AT CROSSWALKS:
11. Sidewalk curb ramps at marked crossings shall be wholly contained within the markings excluding any flared sides.
12. At a corner where a single ramp (either type a or b; located diagonally serves two crosswalks, this shall be a 48" minimum clear space at the ramp bottom wholly contained within the intersection crosswalk markings (see figure 1).
13. Where stop lines are necessary, they shall be located in advance of sidewalk curb ramps.

UTILITIES - DRAINAGE INLETS OR GRATES:
14. Where feasible, provide for drainage inlets or grates immediately upstream from the curb ramps. Reticuline or rectangular drainage grates are to be used in the area of curb ramps.
15. Do not place signal poles, sign posts, utility poles, fire hydrants, etc., within the ramp or side flare areas.

R-2 SIDEWALK CURB-RAMP DETAIL
NOT TO SCALE

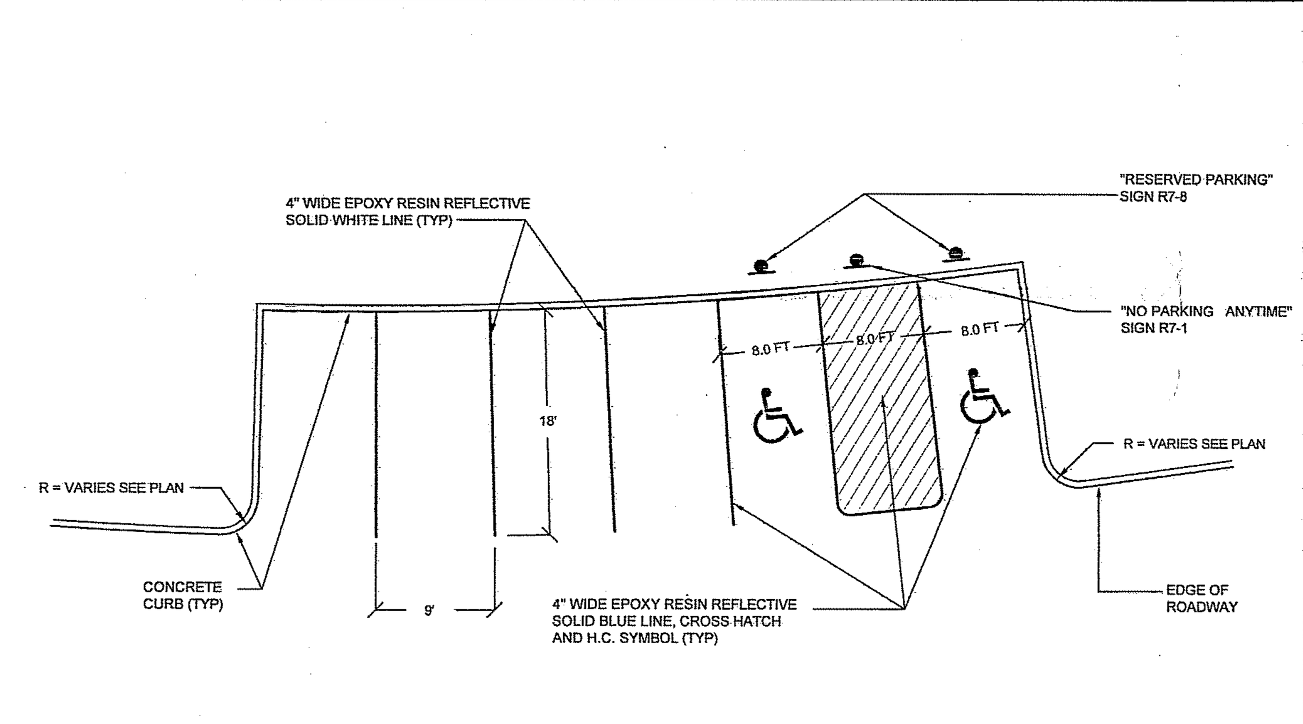

NOTE:
1. Handicap parking spaces shall be located as shown on plan.

R-3 TYPICAL PARKING STALL LAYOUT
NOT TO SCALE

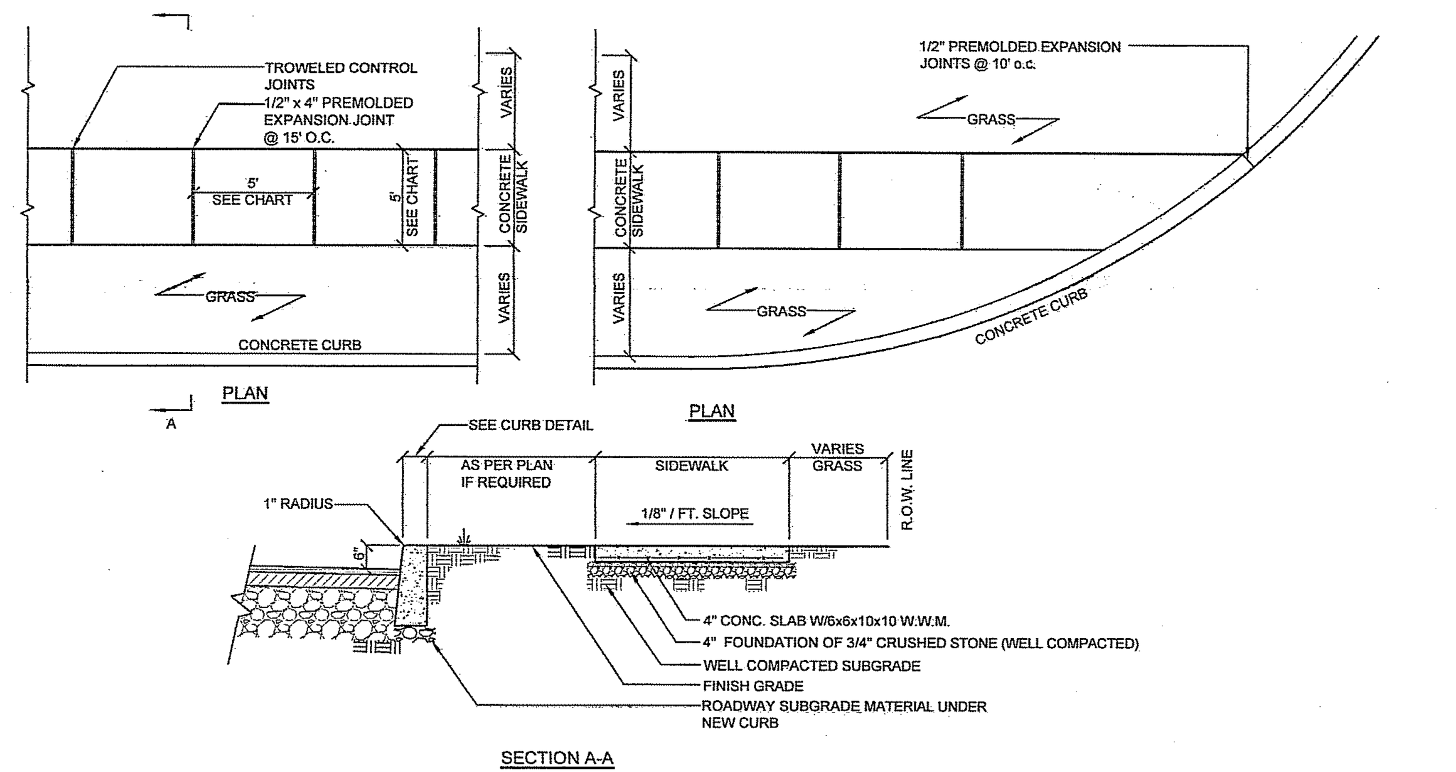

R-4 CONCRETE SIDEWALK DETAIL
NOT TO SCALE

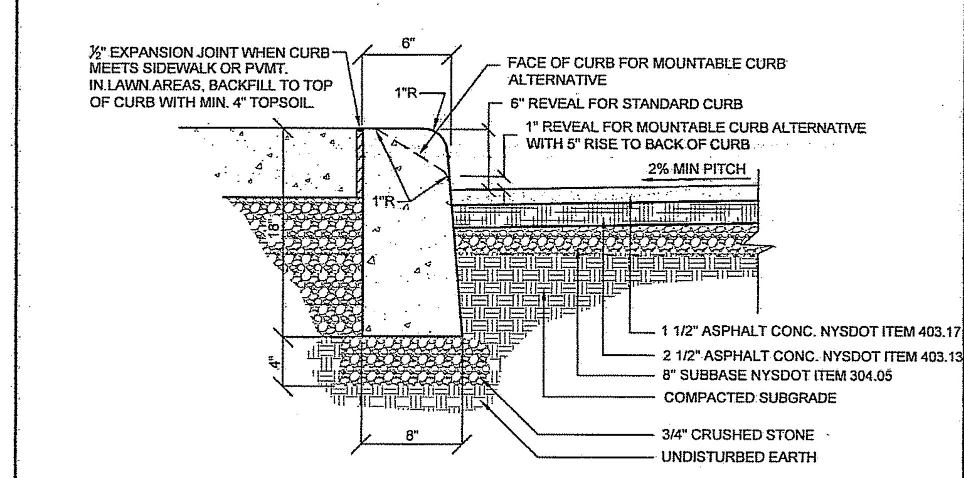

NOTE:
1. Provide 1/2" expansion joint in concrete curb every ten feet. Construct curb with class a concrete (3000 psi).
2. Mountable curb alternative shall be installed at locations shown on the plan.
3. Transition from standard to mountable curb sections shall be smooth and tapered.

R-5 PAVEMENT AND STANDARD/MOUNTABLE CONCRETE CURB DETAIL
NOT TO SCALE

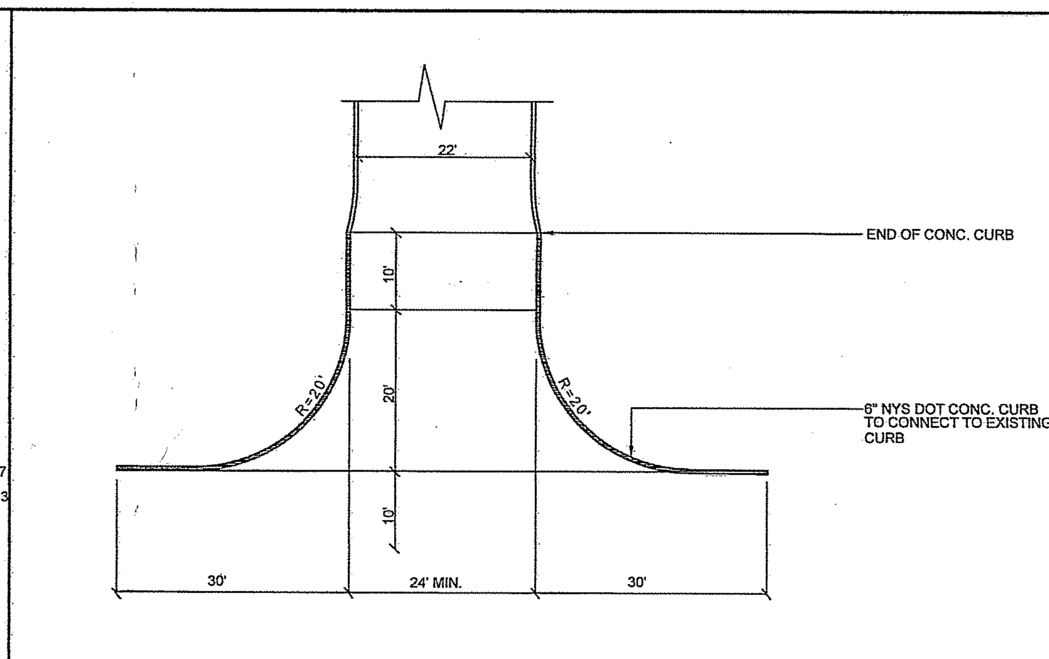

NOTE:
1. NYSDOT standard sheet 608-04: Type 2 Driveway Entrance shall be used for minor commercial with curb.

R-6 NYSDOT TYPE 2 DRIVEWAY ENTRANCE DETAIL
NOT TO SCALE

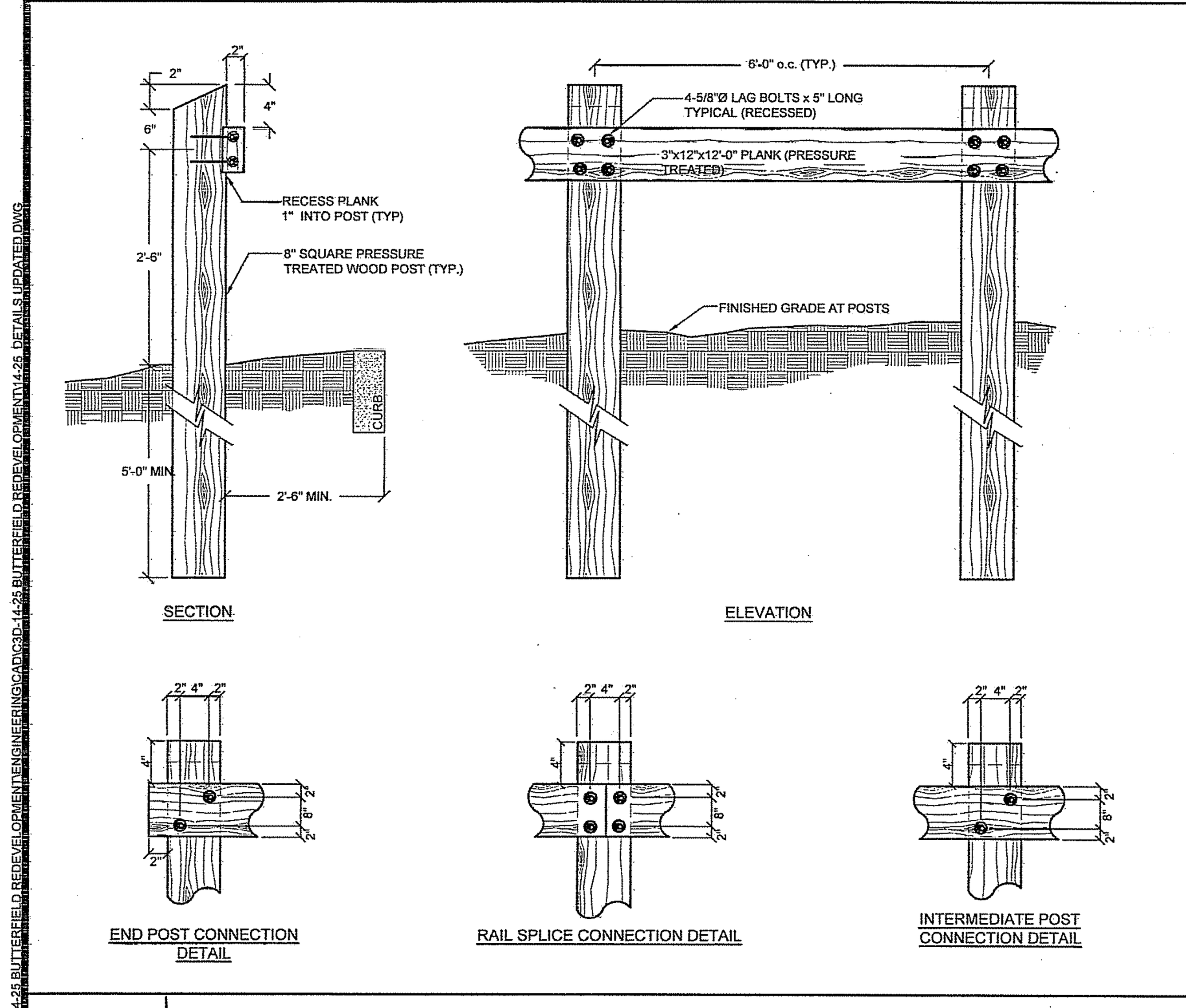

R-7 TIMBER GUARDRAIL DETAIL
NOT TO SCALE

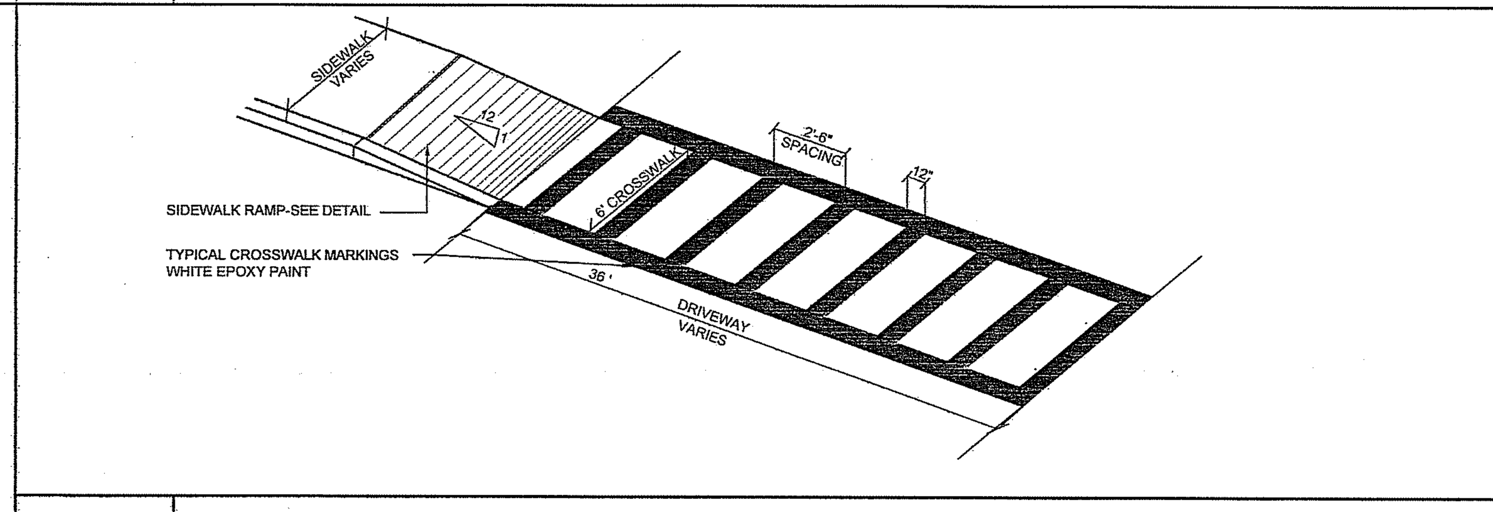

R-8 PAINTED CROSS WALK
NOT TO SCALE

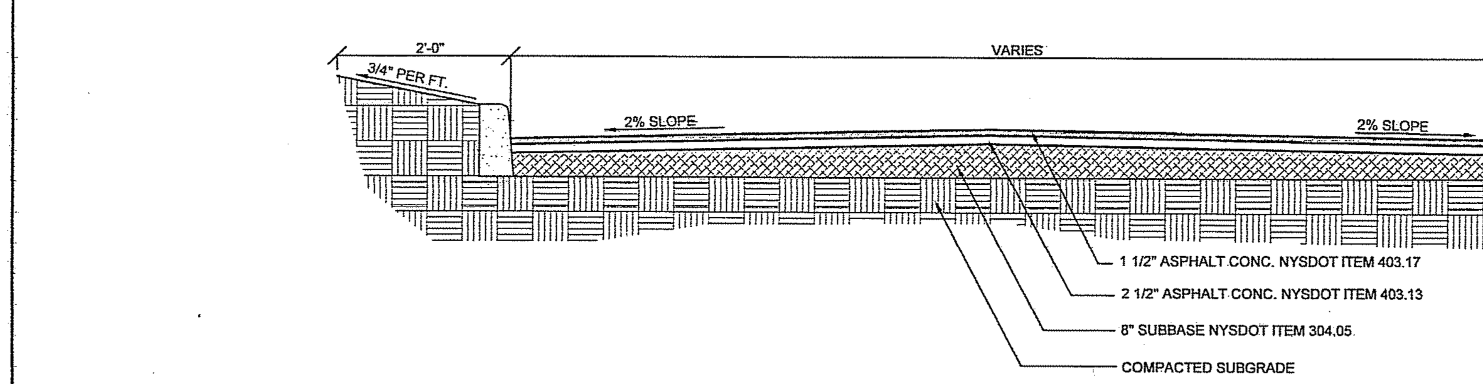

PUTNAM COUNTY DEPARTMENT OF HEALTH
DIVISION OF ENVIRONMENTAL HEALTH SERVICES

These plans are hereby approved pursuant to Part 5 of the New York State Sanitary Code, Article 17 of the New York State Environmental Conservation Law and Article __8__ of the Putnam County Sanitary Code, subject to the provisions of the Letter of Approval issued this date. See first sheet for signature.

R-9 TYPICAL DRIVEWAY SECTION
NOT TO SCALE

SAWCUT PAVEMENT AND APPLY TACK COAST TO ALL CONTACT SURFACES PRIOR TO PLACING ASPHALT OVERLAY AS REQUIRED (SEE DETAIL).

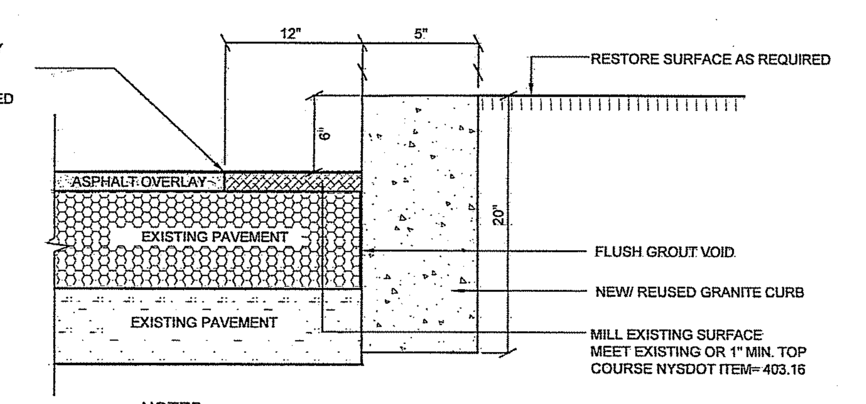

NOTES:
1. This detail applies to the installation of new curb along existing roadway.
2. Provide 1/2" expansion joint in curb every ten feet.
3. NYSDOT standard sheet 609-01 shall be used for replacing granite curbing.

R-10 NYSDOT CONCRETE CURB INSTALLATION DETAIL
NOT TO SCALE

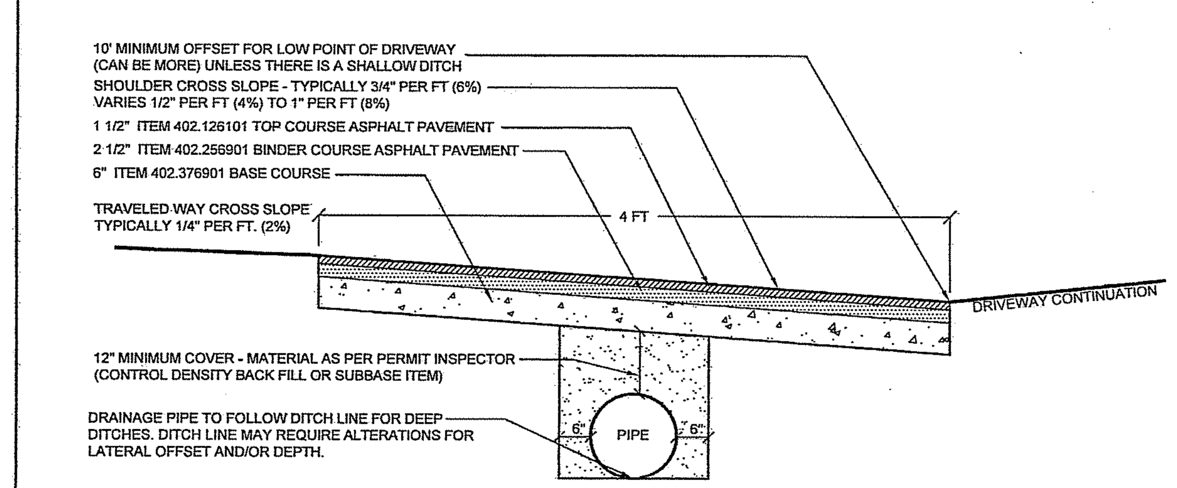

R-11 NYSDOT DRIVEWAY ENTRANCE PAVEMENT DETAIL
NOT TO SCALE

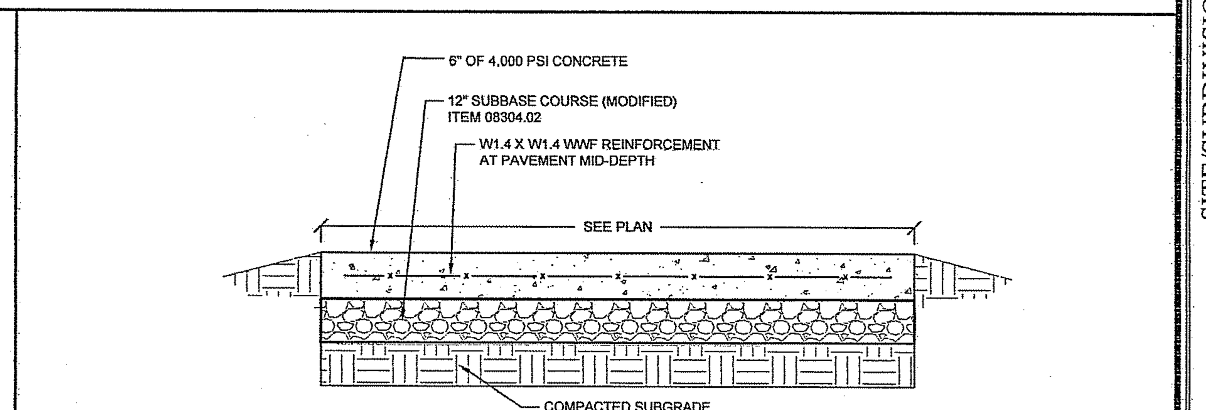

R-12 TYPICAL REINFORCED PAVEMENT SECTION
NOT TO SCALE

NOTE: UNAUTHORIZED ALTERATIONS OR ADDITIONS TO THIS DRAWING IS A VIOLATION OF SECTION 7209 (2) OF THE NEW YORK STATE EDUCATION LAW.

F:\2014\14-25 BUTTERFIELD REDEVELOPMENT\ENGINEERING\CAD\C3D-14-25 BUTTERFIELD REDEVELOPMENT\14-25 DETAILS UPDATED.DWG

Site Design Consultants
Civil Engineers • Land Planners
251-F Underhill Avenue, Yorktown Heights, NY 10598
(914) 962-4488 - Fax: (914) 962-7386
www.sitedesignconsultants.com

PROJECT # 14-25

COPYRIGHT © 2012 BY SITE DESIGN CONSULTANTS, ALL RIGHTS RESERVED

Engineer:
Joseph C. Riina, P.E.
NYS Lic. No. 64431

Revisions:

No.	Date	Comments:
1	12-3-14	Revisions per comments from B&L
2	1-9-15	Revisions per comments from B&L
3	2-10-15	Revisions per comments from B&L
4	2-19-15	Parking Schedule
5	3-13-15	Revisions per NYSDOT
6	3-23-15	Revisions per comments from B&L
7	4-23-15	Revisions per comments from PCDOH
8	4-27-15	Revisions per comments from PCDOH meeting

SCALE: NTS
DRAWN BY: EL
DATE: 10/22/14

SITE DETAILS

SITE/SUBDIVISION PLAN
PREPARED FOR
Butterfield Redevelopment Project
1756 NYS ROUTE 9D
Village Of Cold Spring — Putnam County, New York

Sheet C-502

W-1 WATER MAIN BEDDING DETAIL
NOT TO SCALE

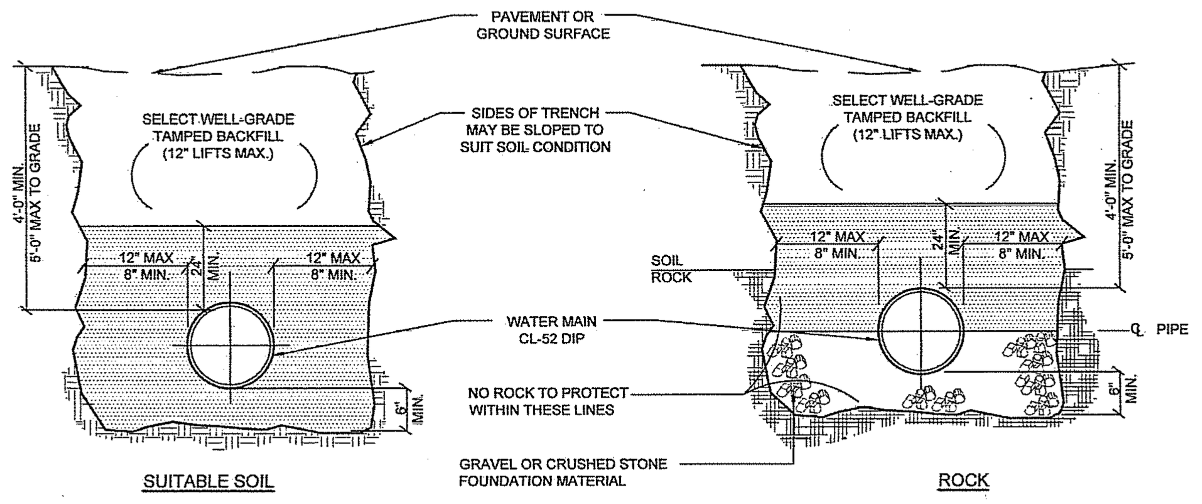

NOTES:
1. In materials to be considered as unsuitable (i.e. Muck) material is to be replaced 24" below the pipe invert and replaced with item no. 4 bedding.
2. A continuous and uniform bedding shall be provided in the trench for all buried pipe. Backfill material shall be tamped in layers around the pipe and to a sufficient height above the pipe to adequately support and protect the pipe. Stones found in the trench shall be removed for a depth of at least six inches below the bottom of the pipe.
3. See Pavement Replacement Detail for backfill specifications in local and main Village roads.
4. The contractor shall comply with all prevailing laws for safety during trenching.

W-4 SEPARATION OF WATER MAINS, SANITARY SEWERS OR STORM SEWERS
NOT TO SCALE

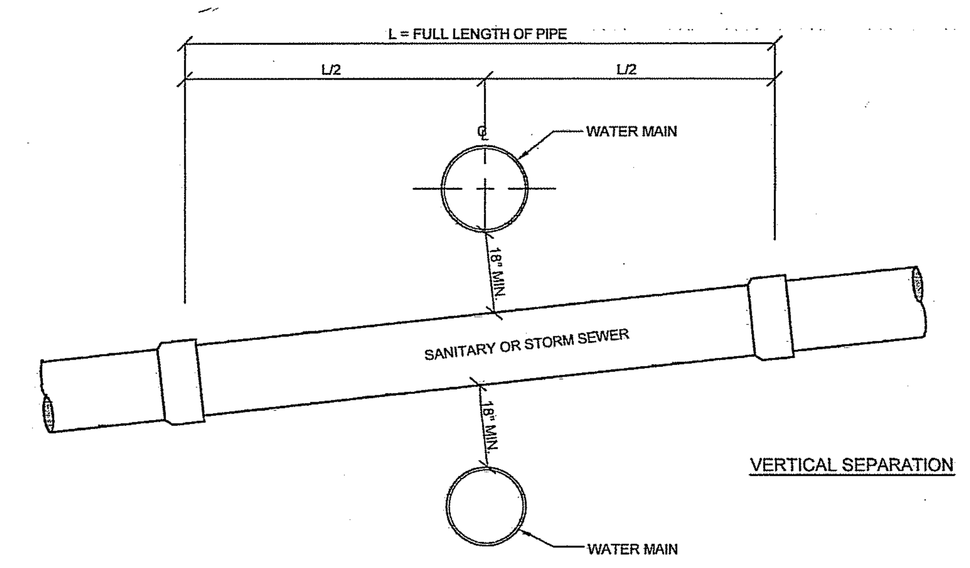

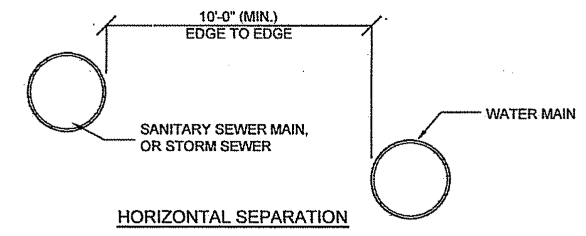

NOTES:
1. Any deviation from the required minimum separations shall be subject to a review and approval by the Putname County Department of Health prior to construction
2. HORIZONTAL SEPARATION NOTES:
   A Water mains shall be laid at least ten (10) feet horizontally, as measured from edge to edge, from any existing or proposed sewer or drain lines. Should local conditions prevent a lateral separation of ten feet, a water main may be laid closer than ten feet to a sewer if (1) it is laid in a separate trench, or if (2) it is laid in the same trench with the water main located at one side on a bench of undisturbed earth and if in either case the elevation of the crown of the sewer or drain is at least 18 inches below the bottom of the water main
   B When it is impossible to obtain proper horizontal separation, as stipulated above, the sewer or drain shall be constructed of materials and with joints equivalent to the standards for the water main and shall be pressure tested to assure water tightness prior to backfilling.
3. VERTICAL SEPARATION NOTES:
   A Normal conditions: whenever a water main must cross over or under a sewer or drain, the pipes shall be laid to provide a vertical separation between them of at least 18 inches, as measured from the bottom of the higher pipe to the crown of the lower pipe.
   B Unusual conditions: when conditions prevent a vertical separation of 18 inches, the sewer shall be constructed of materials and with joints equivalent to the water main standards and shall be pressure tested to assure water tightness prior to backfilling.
   C Water main crossing over sewers:
      i. Vertical separation of 18 inches must be provided;
      ii. Adequate structural support must be provided for the sewer to prevent excessive deflection of joints and settling;
      iii. Full length of water pipe must be centered at the point of crossing, no joints will be permitted at the point of crossing;.

W-7 THRUST BLOCKING FOR HORIZONTAL BENDS
NOT TO SCALE

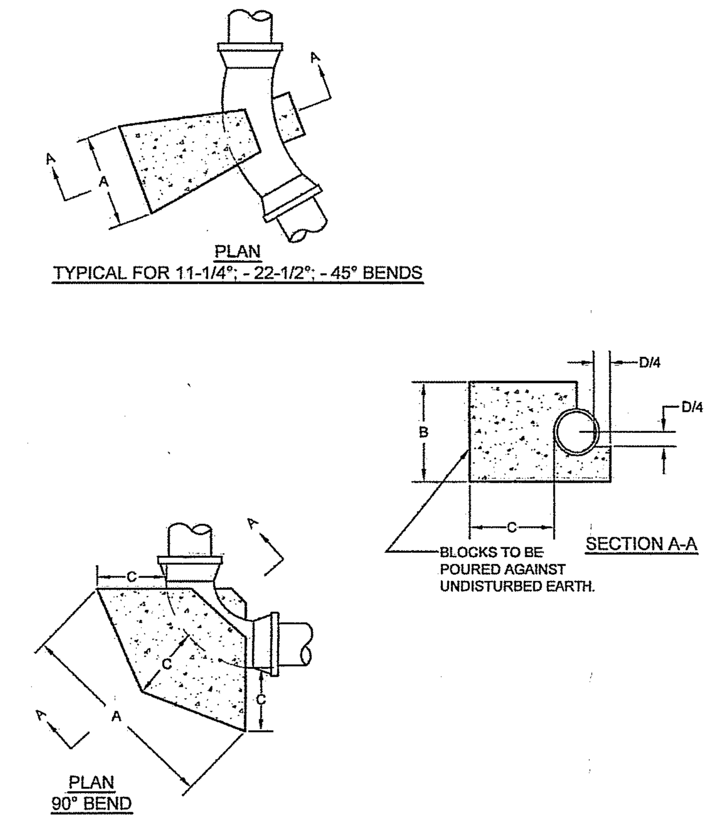

PIPE DIAM. IN.	BEND	BLOCK DIMENSIONS A IN.	B IN.	C IN.	CONCRETE VOLUME FT.³
16	90	80	32	32	39.5
	45	48	28	30	19.7
	22.5	30	22	26	10.0
	11.25	20	18	12	3.8
12	90	56	26	20	15.0
	45	38	22	10	7.7
	22.5	20	20	12	3.6
	11.25	18	18	12	3.0
10	90	48	22	16	8.9
	45	28	20	12	4.0
	22.5	18	18	12	2.7
	11.25	16	16	12	2.2
8	90	34	20	12	4.4
	45	20	18	12	2.5
	22.5	14	14	12	1.6
	11.25				(3)
6	90	24	16	12	2.5
	45	14	14	12	1.5
	22.5	12	12	12	1.2
	11.25				(3)

NOTES:
1. Min. 2,500 psi concrete to be used.
2. Block dimensions are minimum and are based upon soil bearing pressure of 2,000 psf and water pressure of 150 psi. Where soil bearing is less or water pressure is greater, a special design will be required.
3. All bolts shall be covered with burlap before pouring concrete.
4. Bend to be set against disturbed earth, backfill to be firmly tamped, or block to be furnished as directed by the engineer.

W-2 WATER SERVICE CONNECTION DETAIL
NOT TO SCALE

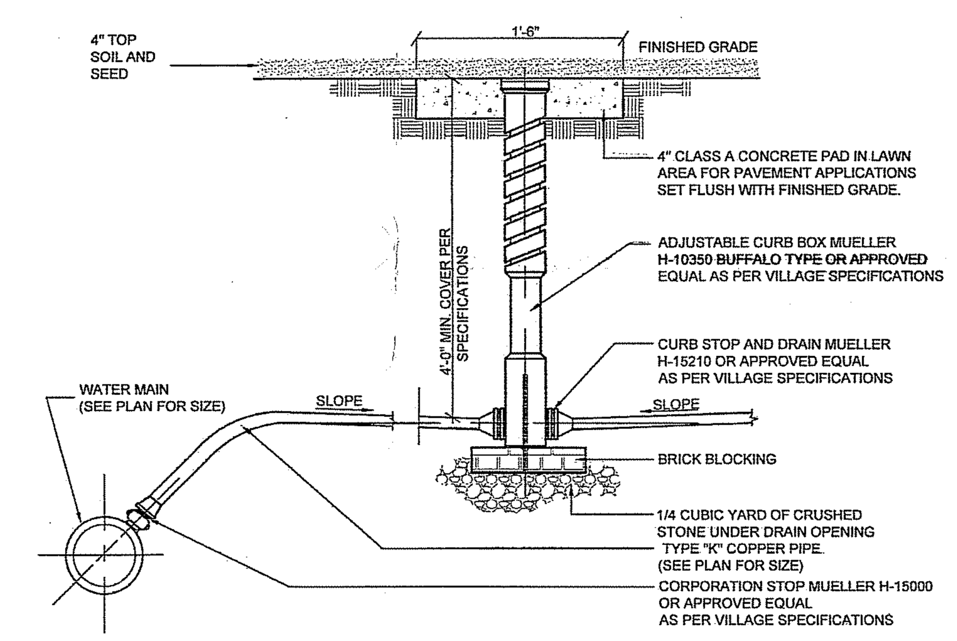

W-5 TAPPING SLEEVE AND GATE VALVE CONNECTION DETAIL
NOT TO SCALE

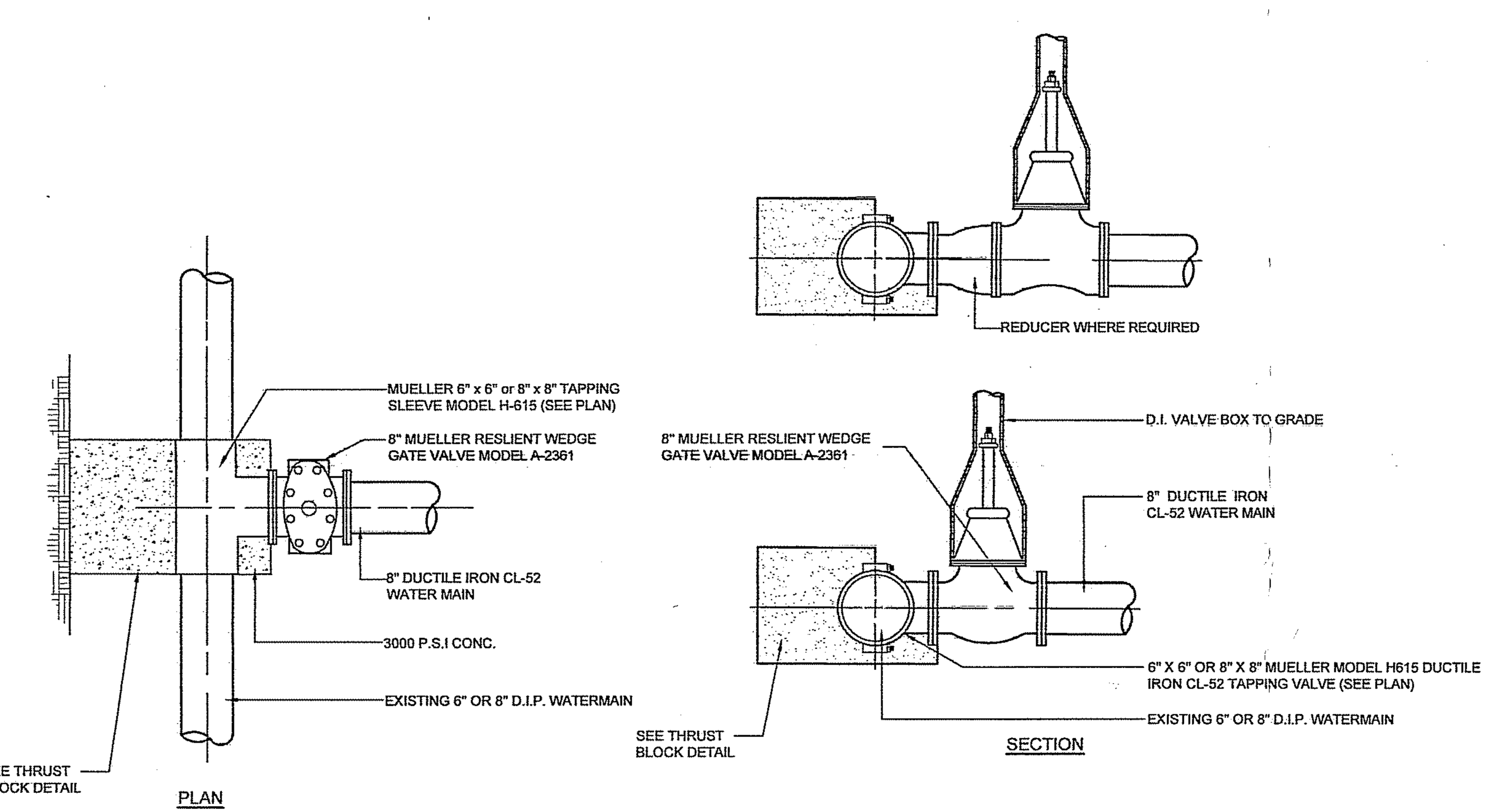

W-3 FIRE HYDRANT DETAIL
NOT TO SCALE

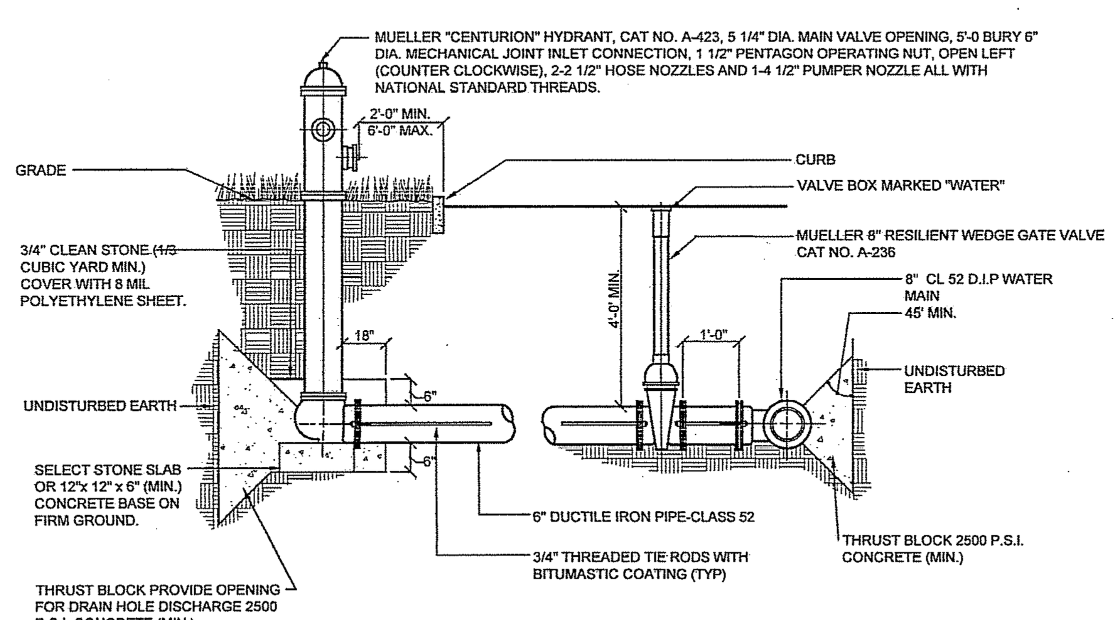

NOTES:
1. Retainer glands, concrete thrust blocks and tie rods shall be used at all locations where restraints are required.
2. If groundwater is encountered within 7 feet of grade, hydrant drain holes shall be plugged. When the drains are plugged the barrels must be pumped dry after use during freezing weather. Where hydrant drains are not plugged, a gravel pocket or dry well shall be provided unless the natural soils will provide adequate drainage. Hydrant drains shall not be connected to or located within 10 feet of sanitary sewers or storm drains.
3. If hydrant is within 10 feet of sewers, hydrant drain holes shall be plugged.
4. Hydrant shall be painted with two coats of Electro- Farrothane, plastic finish, No. 44 red paint.
5. All gate valves shall be Mueller or approved equal and shall meet AWWA standard.

W-6 THRUST BLOCKING FOR TEES
NOT TO SCALE

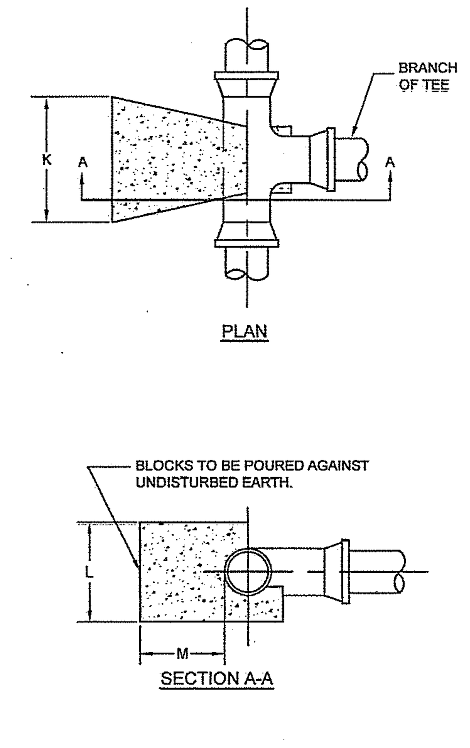

BRANCH SIZE IN.	BLOCK DIMENSIONS K IN.	L IN.	M IN.	CONCRETE VOLUME FT.³
6	18	16	12	2.4
8	30	18	12	4.0
10	42	20	12	6.3
12	50	24	16	11.3
16	60	36	24	30.0

NOTES:
1. Min. 2,500 psi concrete to be used.
2. Block dimensions are minimum and are based upon soil bearing pressure of 2,000 psf and water pressure of 150 psi. Where soil bearing is less or water pressure is greater, a special design will be required.
3. All bolts shall be covered with burlap before pouring concrete.

PUTNAM COUNTY DEPARTMENT OF HEALTH
DIVISION OF ENVIRONMENTAL HEALTH SERVICES

These plans are hereby approved pursuant to Part 5 of the New York State Sanitary Code, Article 17 of the New York State Environmental Conservation Law and Article 8 of the Putnam County Sanitary Code, subject to the provisions of the Letter of Approval issued this date. See first sheet for signature.

NOTE: UNAUTHORIZED ALTERATIONS OR ADDITIONS TO THIS DRAWING IS A VIOLATION OF SECTION 7209 (2) OF THE NEW YORK STATE EDUCATION LAW.

F:\2014\14-25 BUTTERFIELD REDEVELOPMENT\ENGINEERING\CAD\C3D-14-25 BUTTERFIELD REDEVELOPMENT\14-25_DETAILS UPDATED.DWG

PROJECT # 14-25

Site Design Consultants
Civil Engineers • Land Planners
251-F Underhill Avenue, Yorktown Heights, NY 10598
(914) 962-4488 - Fax: (914) 962-7386
www.sitedesignconsultants.com

Engineer: Joseph C. Riina, P.E. NYS Lic. No. 64431

COPYRIGHT © 2012 BY SITE DESIGN CONSULTANTS, ALL RIGHTS RESERVED

Revisions:

No.	Date	Comments:
1	12-3-14	Revisions per comments from B&L
2	1-9-15	Revisions per comments from B&L
3	2-10-15	Revisions per comments from B&L
4	2-19-15	Parking Schedule
5	3-13-15	Revisions per NYSDOT
6	3-23-15	Revisions per comments from B&L
7	4-23-15	Revisions per comments from PCDOH
8	4-27-15	Revisions per comments from PCDOH meeting

SCALE: NTS
DRAWN BY: EL
DATE: 10/22/14

WATER-UTILITY DETAILS

SITE/SUBDIVISION PLAN
PREPARED FOR
Butterfield Redevelopment Project
1756 NYS ROUTE 9D
Village Of Cold Spring — Putnam County, New York

C-503

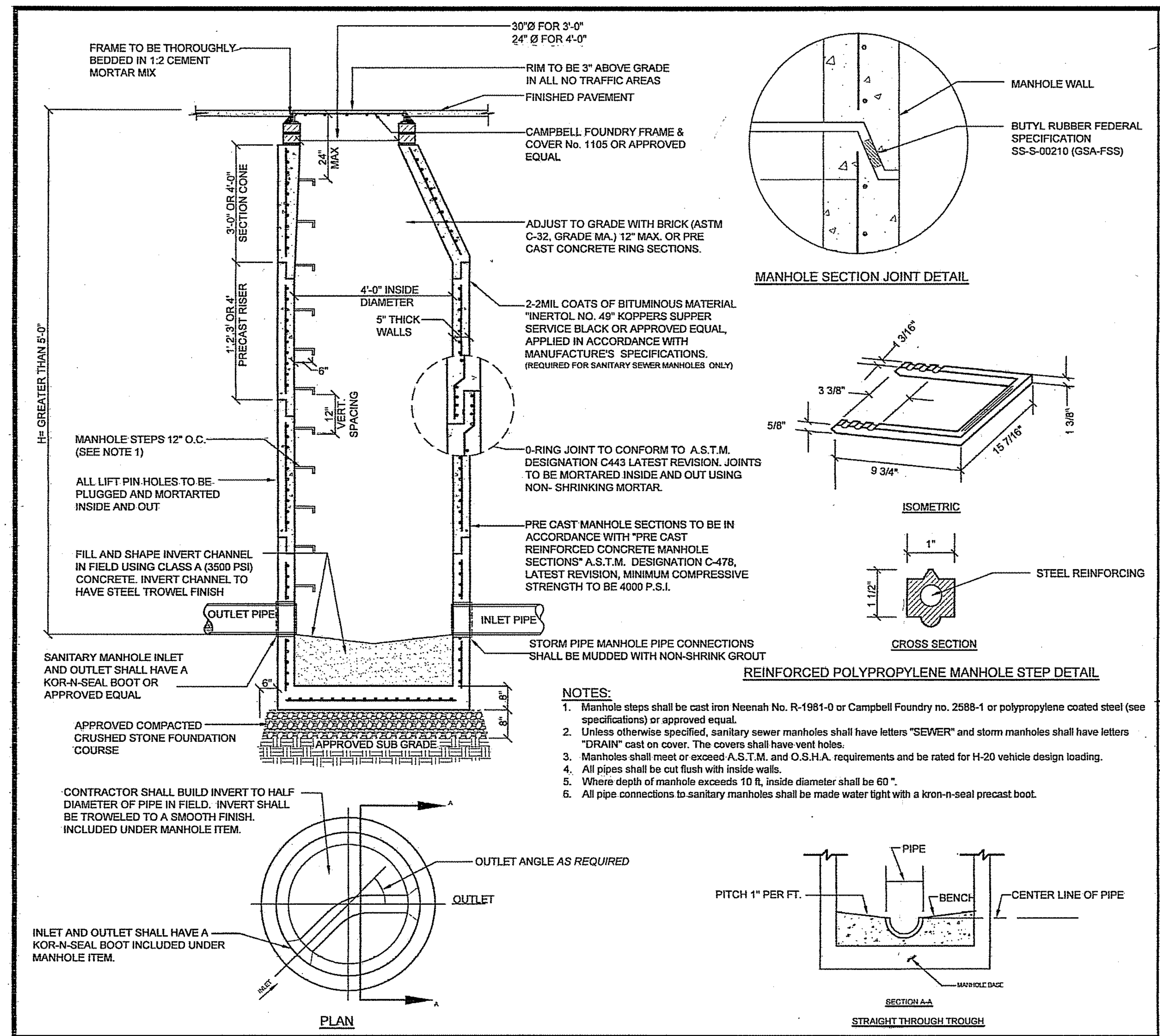

NOTES:
1. Manhole steps shall be cast iron Neenah No. R-1981-0 or Campbell Foundry no. 2588-1 or polypropylene coated steel (see specifications) or approved equal.
2. Unless otherwise specified, sanitary sewer manholes shall have letters "SEWER" and storm manholes shall have letters "DRAIN" cast on cover. The covers shall have vent holes.
3. Manholes shall meet or exceed A.S.T.M. and O.S.H.A. requirements and be rated for H-20 vehicle design loading.
4. All pipes shall be cut flush with inside walls.
5. Where depth of manhole exceeds 10 ft, inside diameter shall be 60".
6. All pipe connections to sanitary manholes shall be made water tight with a kron-n-seal precast boot.

D-1 PRECAST CONCRETE SEWER / STORM DRAIN MANHOLE DETAIL

NOT TO SCALE

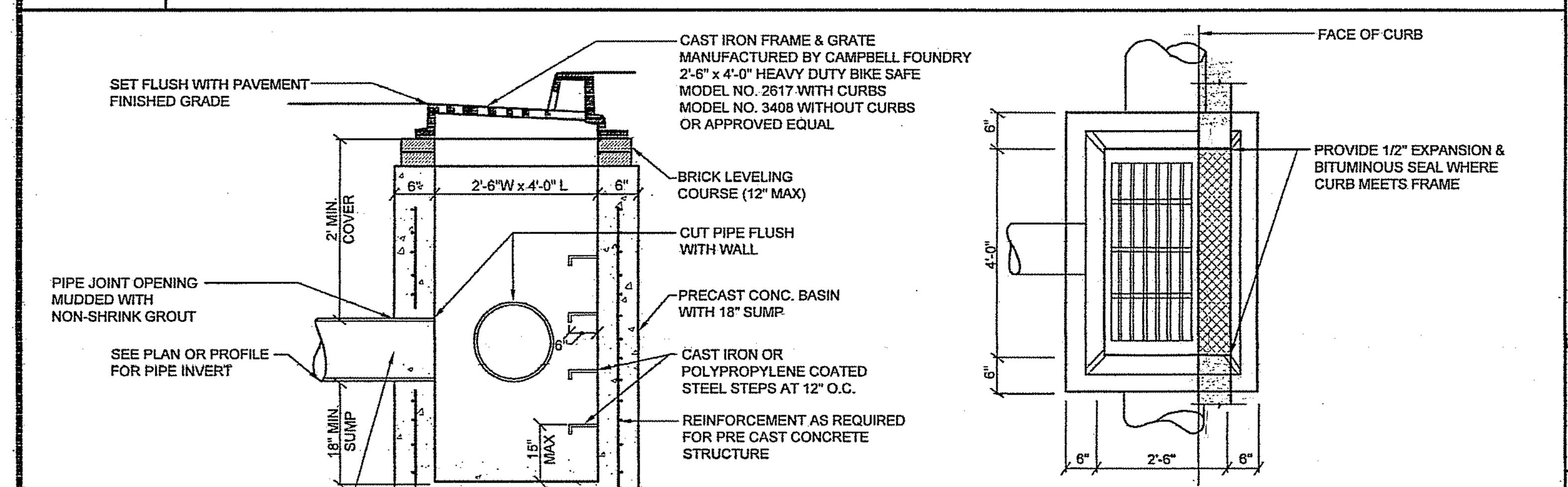

NOTES:
1. Where depth of catch basin exceeds 10 ft, inside dimensions shall be 48" x 48".
2. Catch basin covers and structures shall meet or exceed A.S.T.M. and O.S.H.A. requirements.
3. Pre-cast sections shall be in accordance with "Pre-cast Reinforced Manhole Sections", A.S.T.M. Designation C-478, latest revision. Minimum compressive strength shall be 4000 psi. Structures shall be rated for H-20 vehicle loading.

D-2 TYPICAL CATCH BASIN DETAIL

NOT TO SCALE

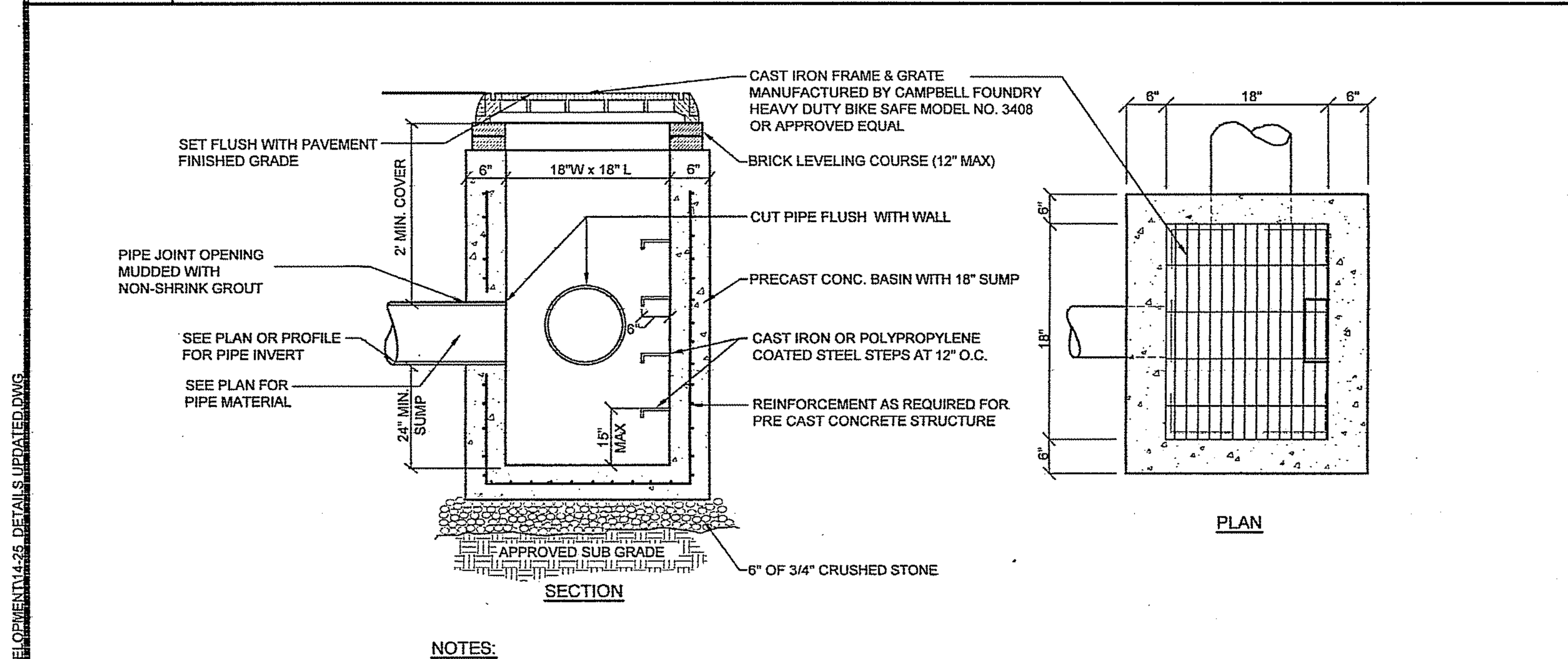

NOTES:
1. Where depth of catch basin exceeds 10 ft, inside dimensions shall be 48" x 48".
2. Top of basin shall be built with precast concrete structural slab designed for H-20 loading.

D-3 PRECAST CATCH BASIN - DRAIN INLET DETAIL

NOT TO SCALE

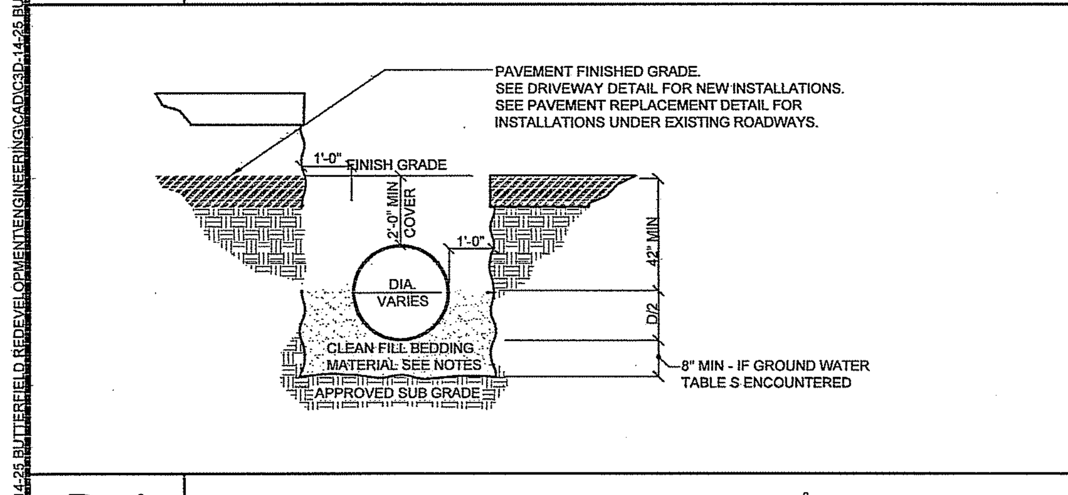

NOTES:
1. Pipe shall be laid and connected in the bedding which shall consist of:
A. Compacted existing subsoil when laid above ground water or;
B. 3/4" crushed stone when laid below ground water.
2. If subsoil is determined to be unsuitable by the Engineer, all unsuitable material shall be removed for at least 2'-6" below the pipe invert or twice the pipe diameter, whichever is greater, and replaced with compacted a 3/4" stone must be used at a 95 percent proctor and to be laid 1 foot over the pipe.
3. The contractor shall comply with all prevailing laws for safety during trenching.

D-4 STORM PIPE BEDDING DETAIL

NOT TO SCALE

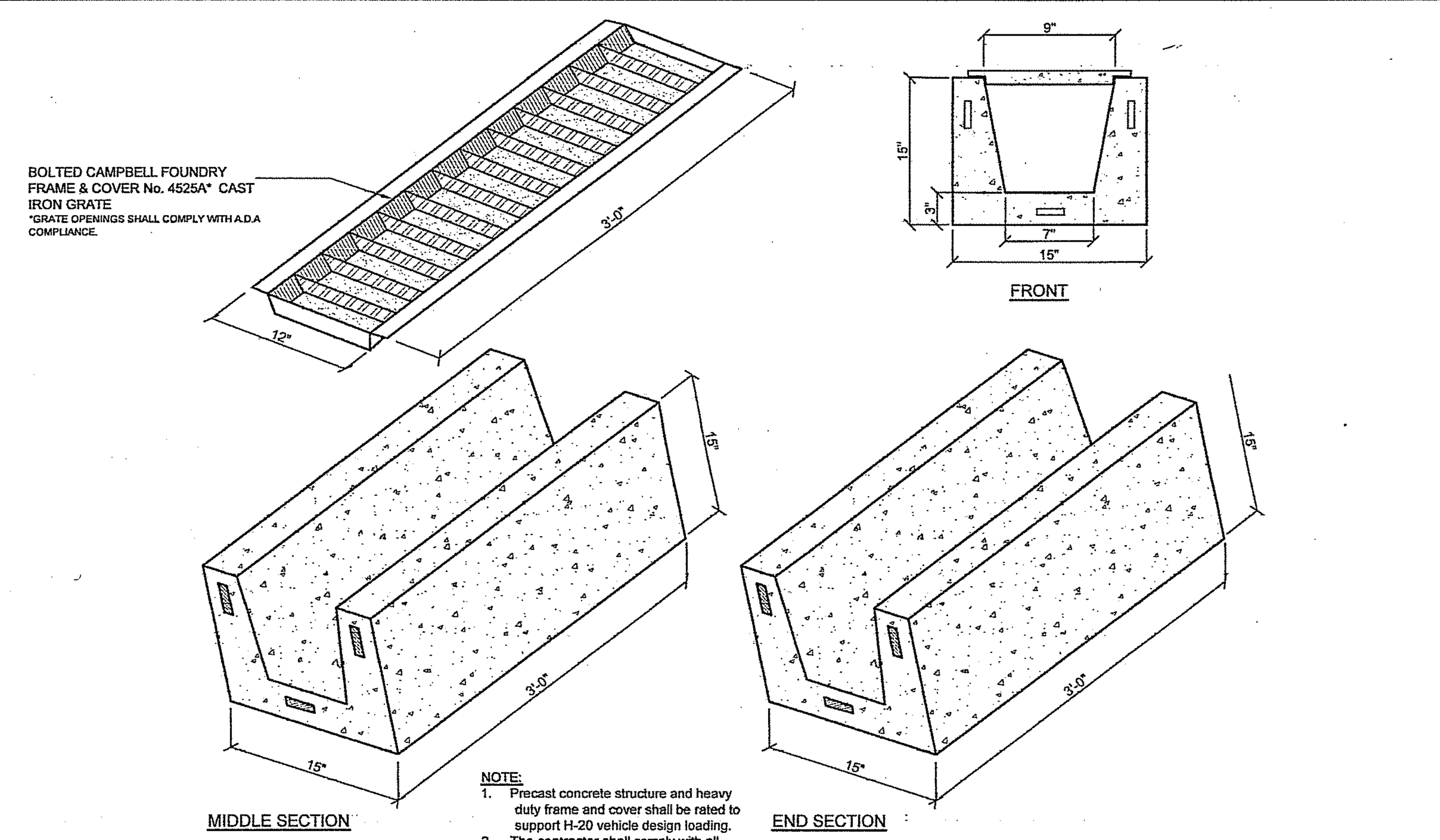

NOTE:
1. Precast concrete structure and heavy duty frame and cover shall be rated to support H-20 vehicle design loading.
2. The contractor shall comply with all prevailing laws for safety during trenching.

D-5 TRENCH DRAIN BOX & GRATE DETAIL FOR UNDERDRAIN TO BIO-RETENTION

NOT TO SCALE

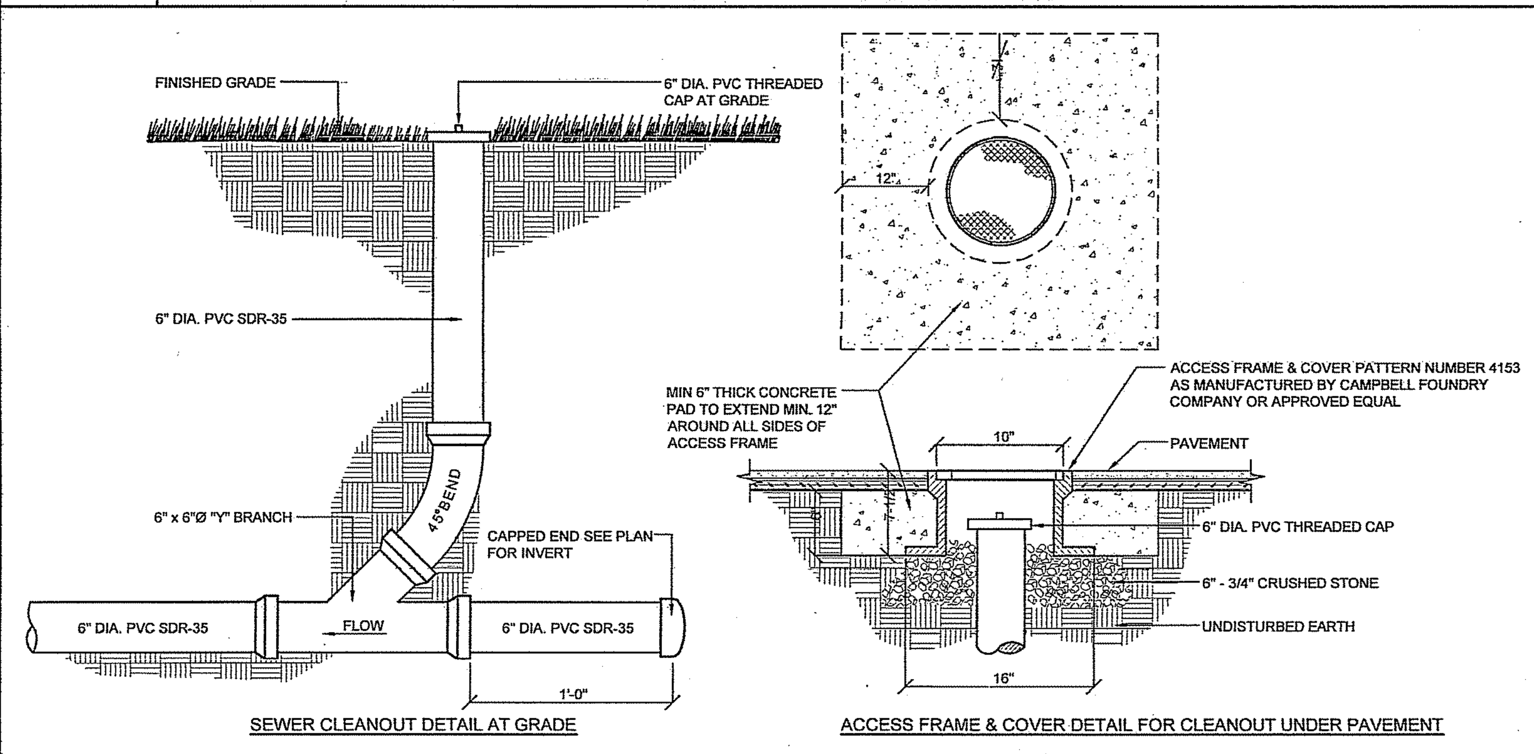

NOTES:
1. Clean-outs shall be spaced at minimum 50 ft intervals and/or at all changes in vertical and horizontal alignment.
2. All fittings to be white H.D. As manufactured by GPK Products Inc. or approved equal.

S-1 GRAVITY SEWER LATERAL CLEAN-OUT DETAIL

NOT TO SCALE

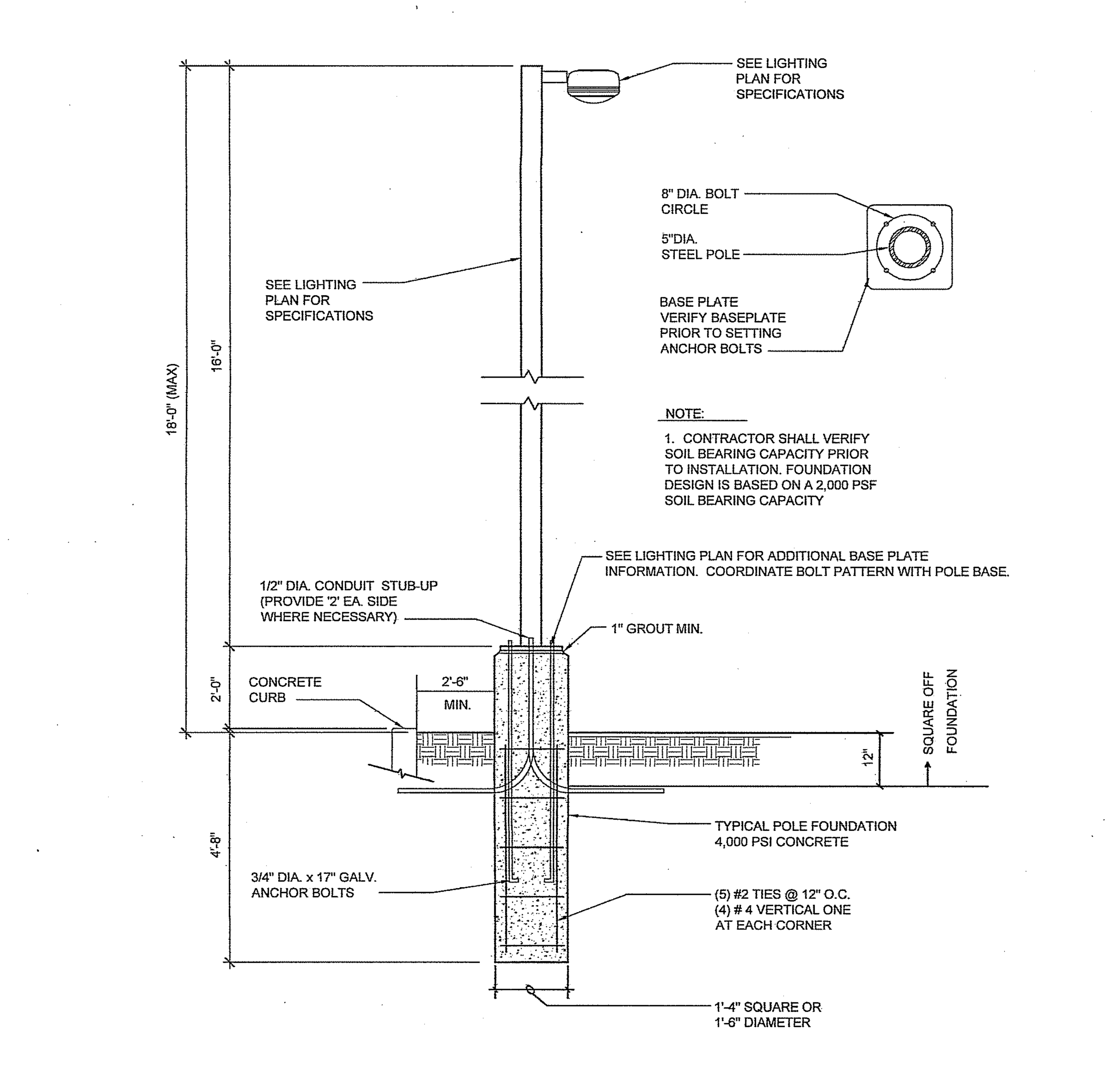

NOTE:
1. CONTRACTOR SHALL VERIFY SOIL BEARING CAPACITY PRIOR TO INSTALLATION. FOUNDATION DESIGN IS BASED ON A 2,000 PSF SOIL BEARING CAPACITY

S-5 LIGHT POLE BASE DETAIL

NOT TO SCALE

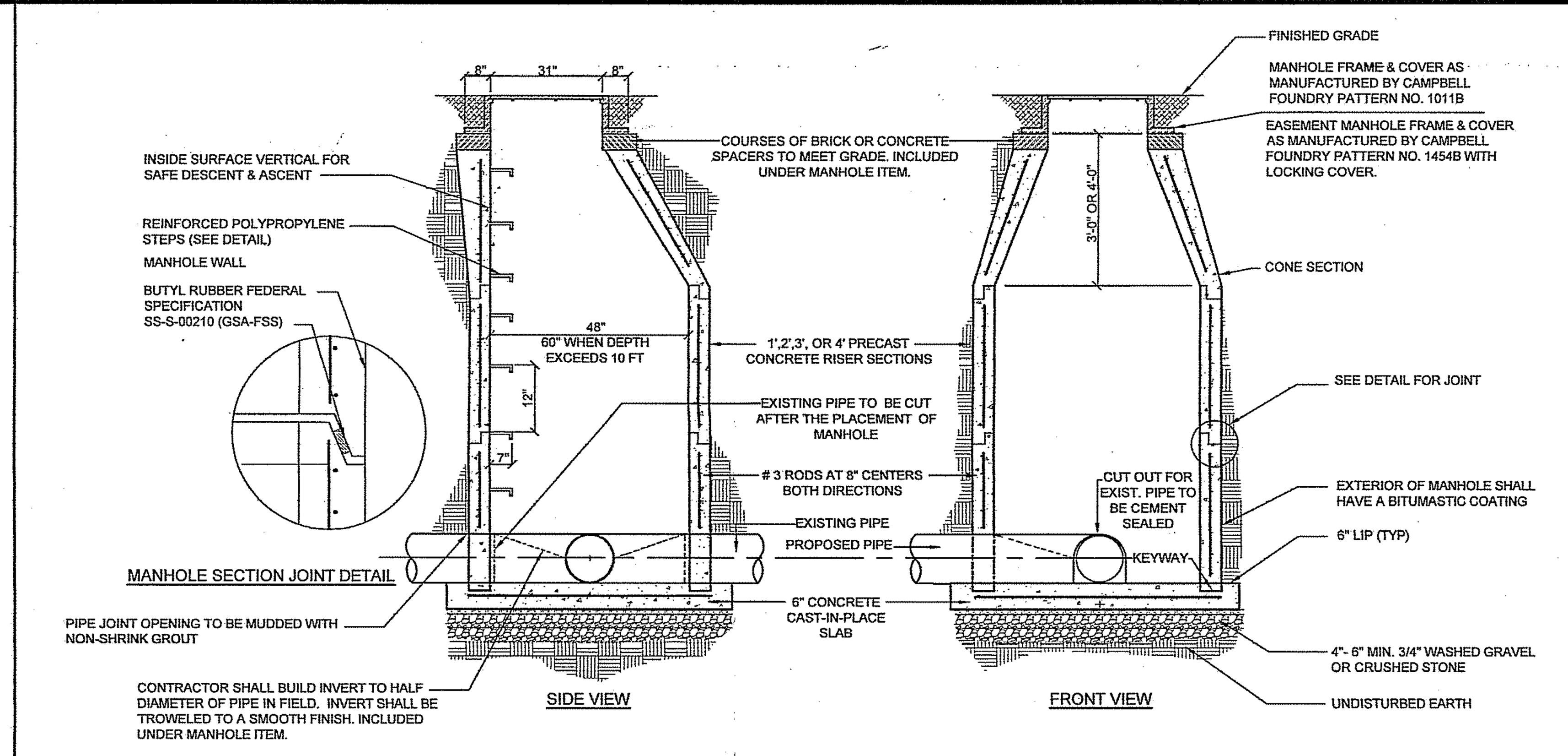

NOTE:
1. Contractor may be required to furnish and install additional steps so as to provide proper ingress and egress to & from manhole.
2. Easement manhole frame & covers shall be set in relation to the surrounding finished grade so as to not collect runoff.
3. All pipe connections to sanitary manholes shall be made water tight with a korn-n-seal precast boot.

S-2 EXISTING LINE TIE-IN "DOGHOUSE" MANHOLE DETAIL

NOT TO SCALE

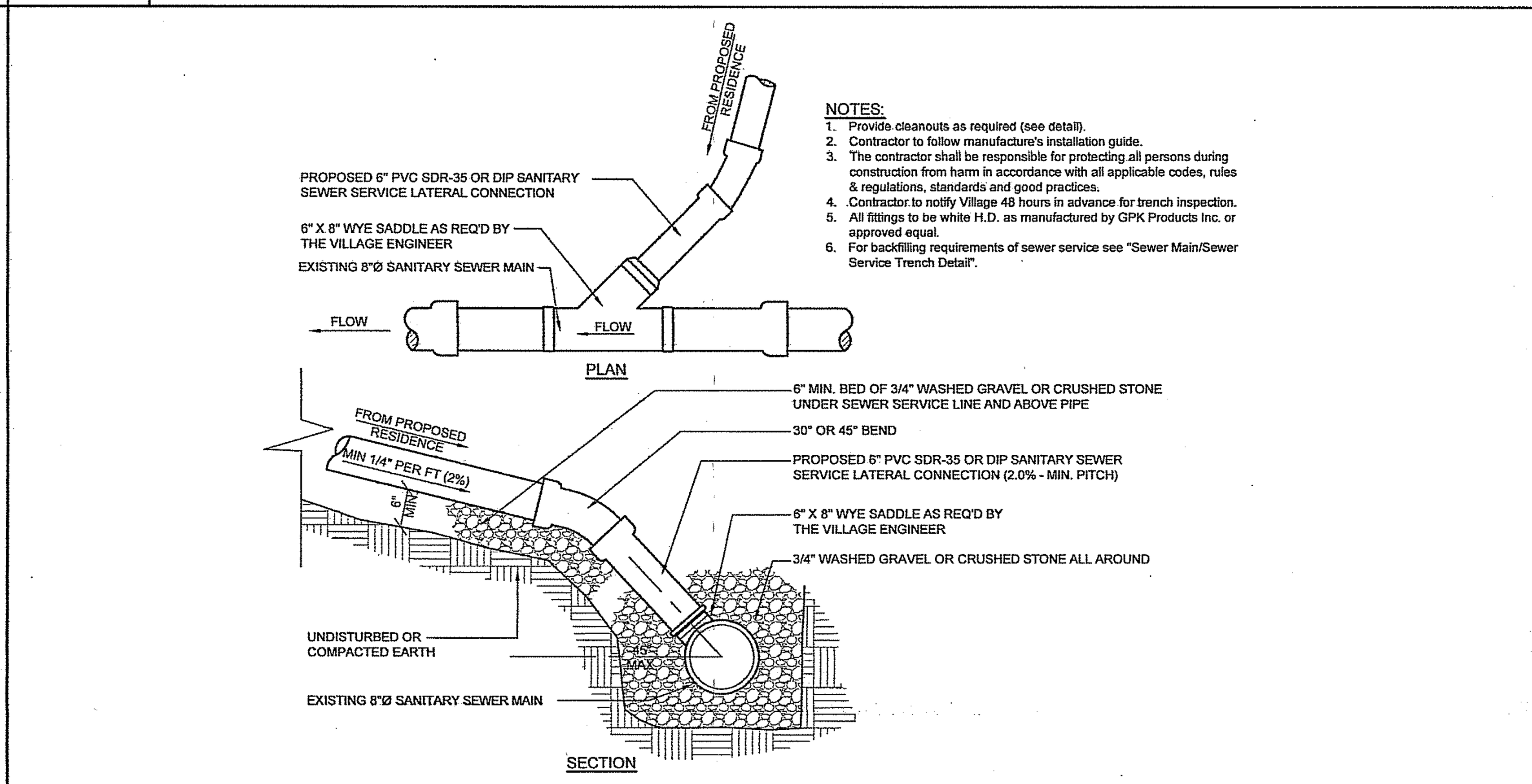

NOTES:
1. Provide cleanouts as required (see detail).
2. Contractor to follow manufacture's installation guide.
3. The contractor shall be responsible for protecting all persons during construction from harm in accordance with all applicable codes, rules & regulations, standards and good practices.
4. Contractor to notify Village 48 hours in advance for trench inspection.
5. All fittings to be white H.D. as manufactured by GPK Products Inc. or approved equal.
6. For backfilling requirements of sewer service see "Sewer Main/Sewer Service Trench Detail".

S-3 SEWER CONNECTION TO PROPOSED MAIN-LINE DETAIL

NOT TO SCALE

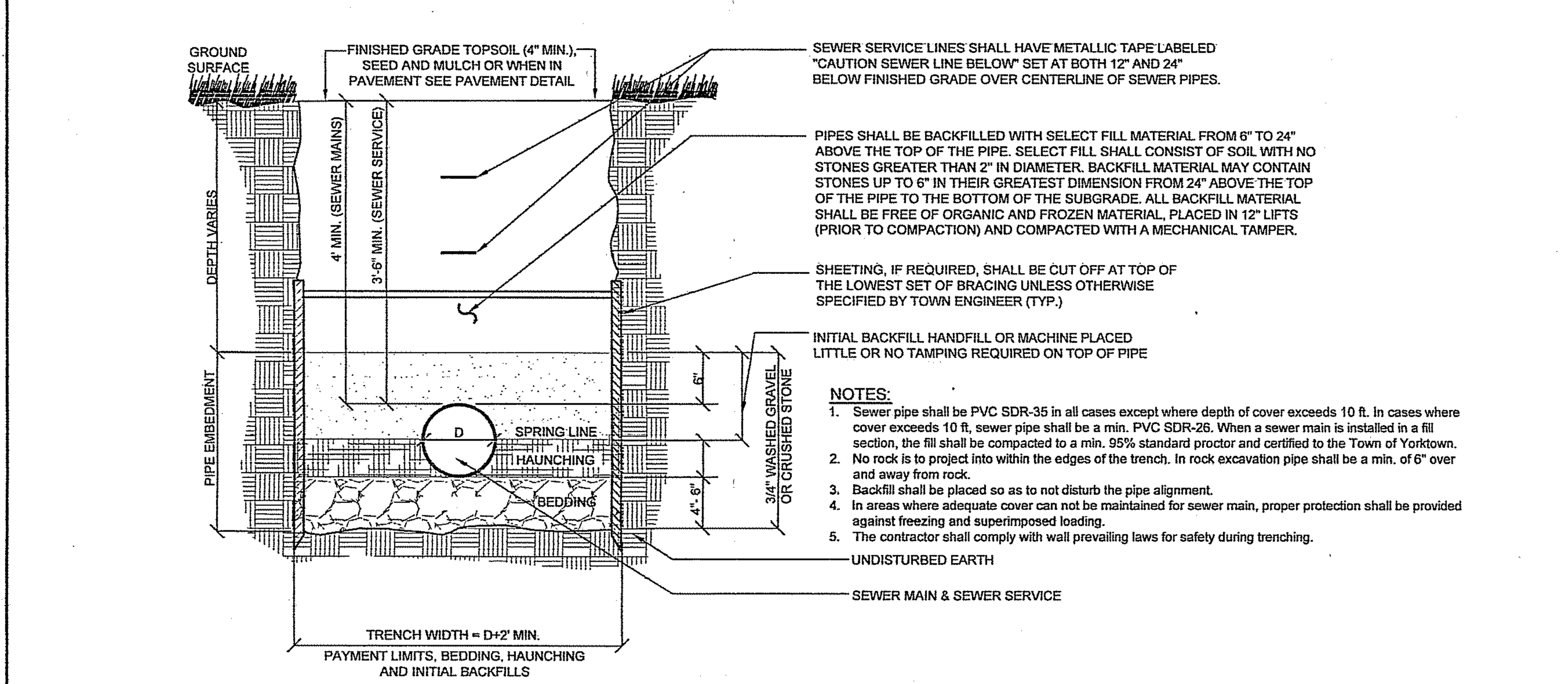

NOTES:
1. Sewer pipe shall be PVC SDR-35 in all cases except where depth of cover exceeds 10 ft. In cases where cover exceeds 10 ft, sewer pipe shall be a min. PVC SDR-26. When a sewer main is installed in a fill section, the fill shall be compacted to a min. 95% standard proctor and certified to the Town of Yorktown.
2. No rock is to project into within the edges of the trench. In rock excavation pipe shall be a min. of 6" over and away from rock.
3. Backfill shall be placed so as to not disturb the pipe alignment.
4. In areas where adequate cover can not be maintained for sewer main, proper protection shall be provided against freezing and superimposed loading.
5. The contractor shall comply with wall prevailing laws for safety during trenching.

S-4 SEWER MAIN / SEWER SERVICE TRENCH DETAIL

NOT TO SCALE

PUTNAM COUNTY DEPARTMENT OF HEALTH
DIVISION OF ENVIRONMENTAL HEALTH SERVICES

These plans are hereby approved pursuant to Part 5 of the New York State Sanitary Code, Article 17 of the New York State Environmental Conservation Law and Article 8 of the Putnam County Sanitary Code, subject to the provisions of the Letter of Approval issued this date. See first sheet for signature

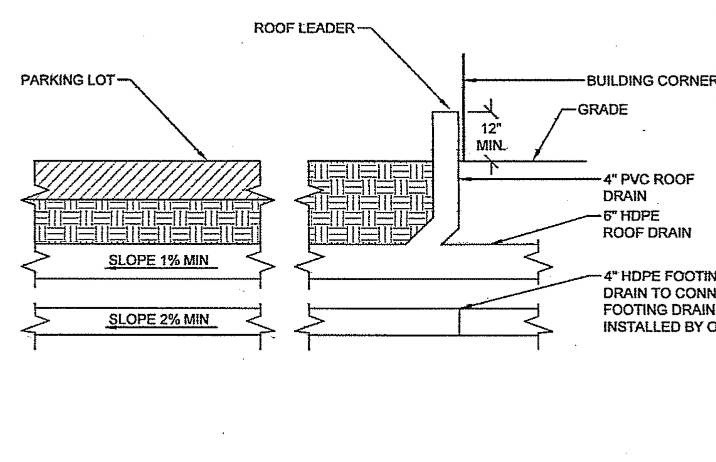

D-6 ROOF & FOOTING DRAIN CONNECTION DETAIL

NOT TO SCALE

NOTE: UNAUTHORIZED ALTERATIONS OR ADDITIONS TO THIS DRAWING IS A VIOLATION OF SECTION 7209 (2) OF THE NEW YORK STATE EDUCATION LAW.

F:\2014\14-25 BUTTERFIELD REDEVELOPMENT\ENGINEERING\CAD\C3D-14-25 BUTTERFIELD REDEVELOPMENT\14-25 DETAILS UPDATED.DWG

Site Design Consultants
Civil Engineers • Land Planners
251-F Underhill Avenue, Yorktown Heights, NY 10598
(914) 962-4488 - Fax: (914) 962-7386
www.sitedesignconsultants.com
PROJECT # 14-25

COPYRIGHT © 2012 BY SITE DESIGN CONSULTANTS, ALL RIGHTS RESERVED

Engineer:
STATE OF NEW YORK · JOSEPH CARLO RIINA · No. 64431 · LICENSED PROFESSIONAL ENGINEER
Joseph C. Riina, P.E.
NYS Lic. No. 64431

Revisions:

No.	Date	Comments:
1	12-3-14	Revisions per comments from B&L
2	1-9-15	Revisions per comments from B&L
3	2-10-15	Revisions per comments from B&L
4	2-19-15	Parking Schedule
5	3-13-15	Revisions per NYSDOT
6	3-23-15	Revisions per comments from B&L
7	4-23-15	Revisions per comments from PCDOH
8	4-27-15	Revisions per comments from PCDOH meeting

SCALE: NTS
DRAWN BY: EL
DATE: 10/22/14

STORM-SANITARY DETAILS

SITE/SUBDIVISION PLAN
PREPARED FOR

Butterfield Redevelopment Project

1756 NYS ROUTE 9D

Village Of Cold Spring — Putnam County, New York

Sheet C-504

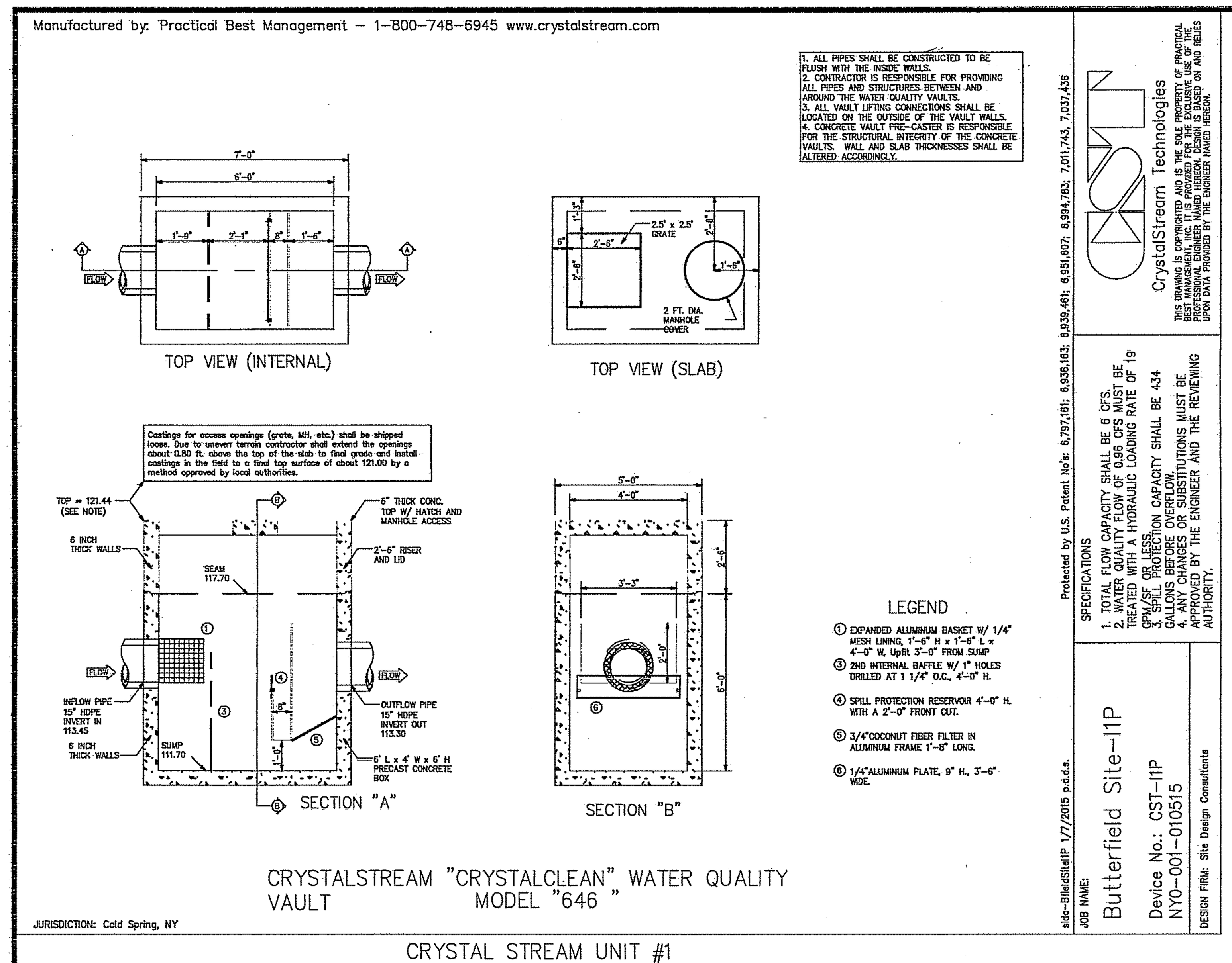

CRYSTAL STREAM UNIT #1

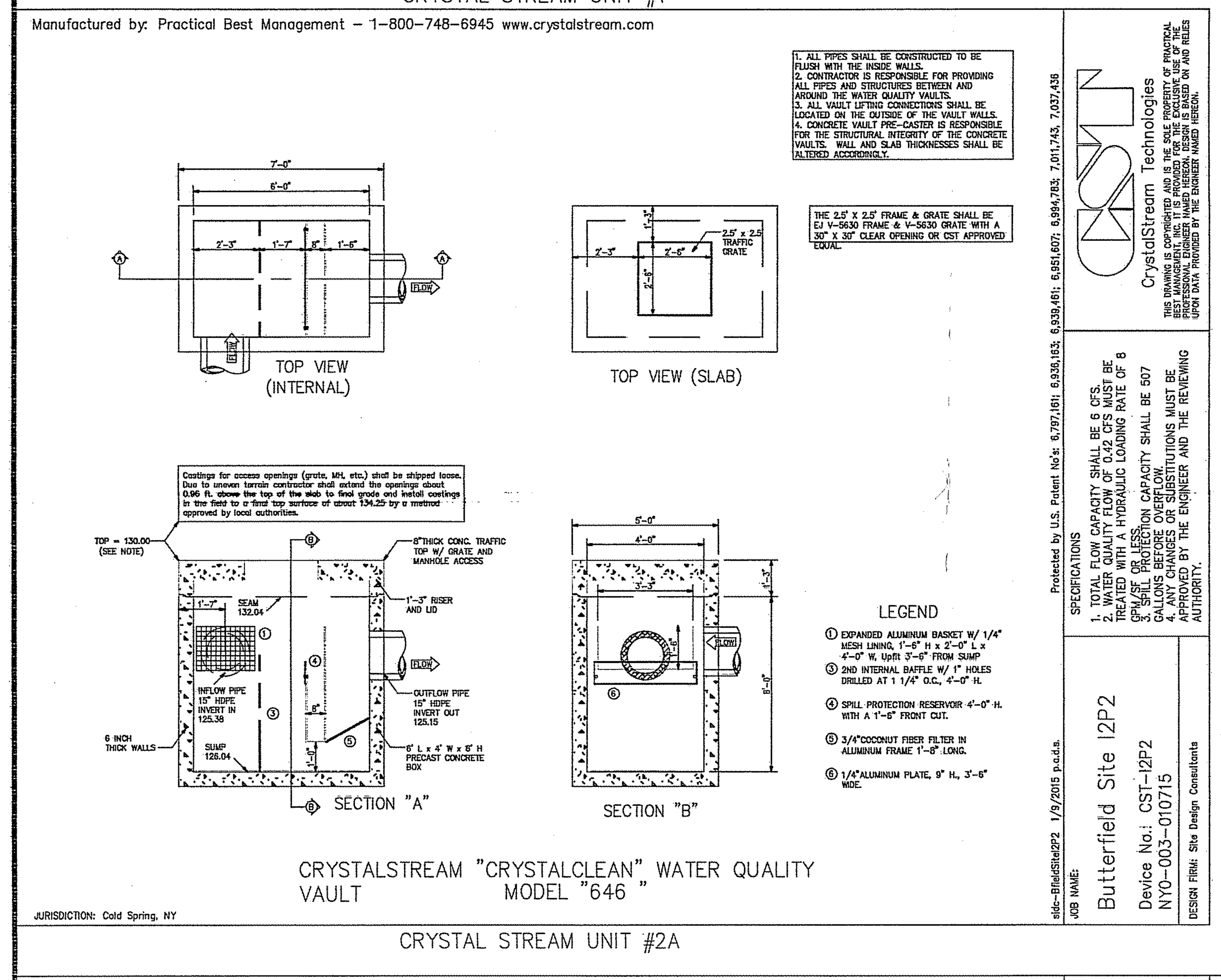

CRYSTAL STREAM UNIT #2A

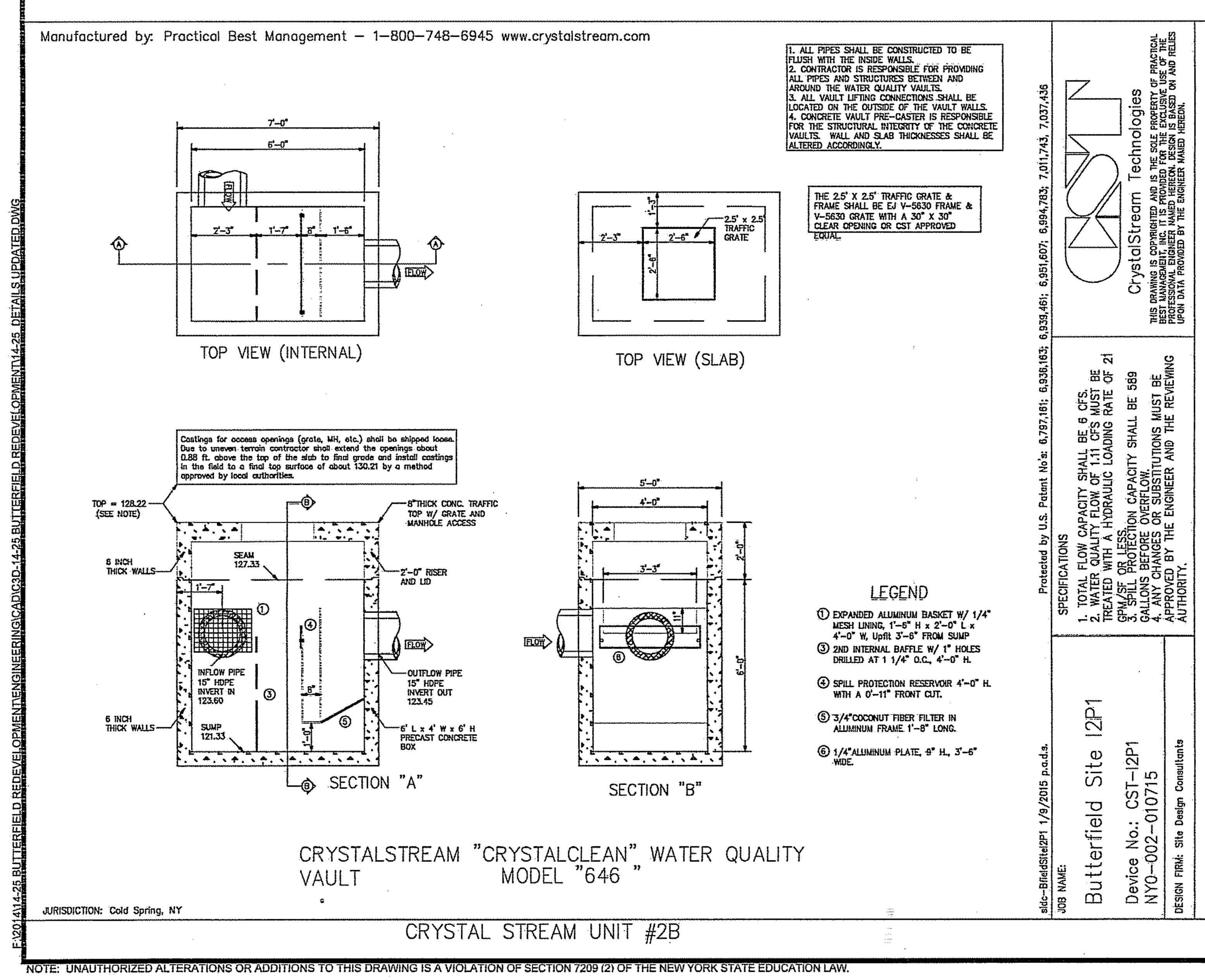

CRYSTAL STREAM UNIT #2B

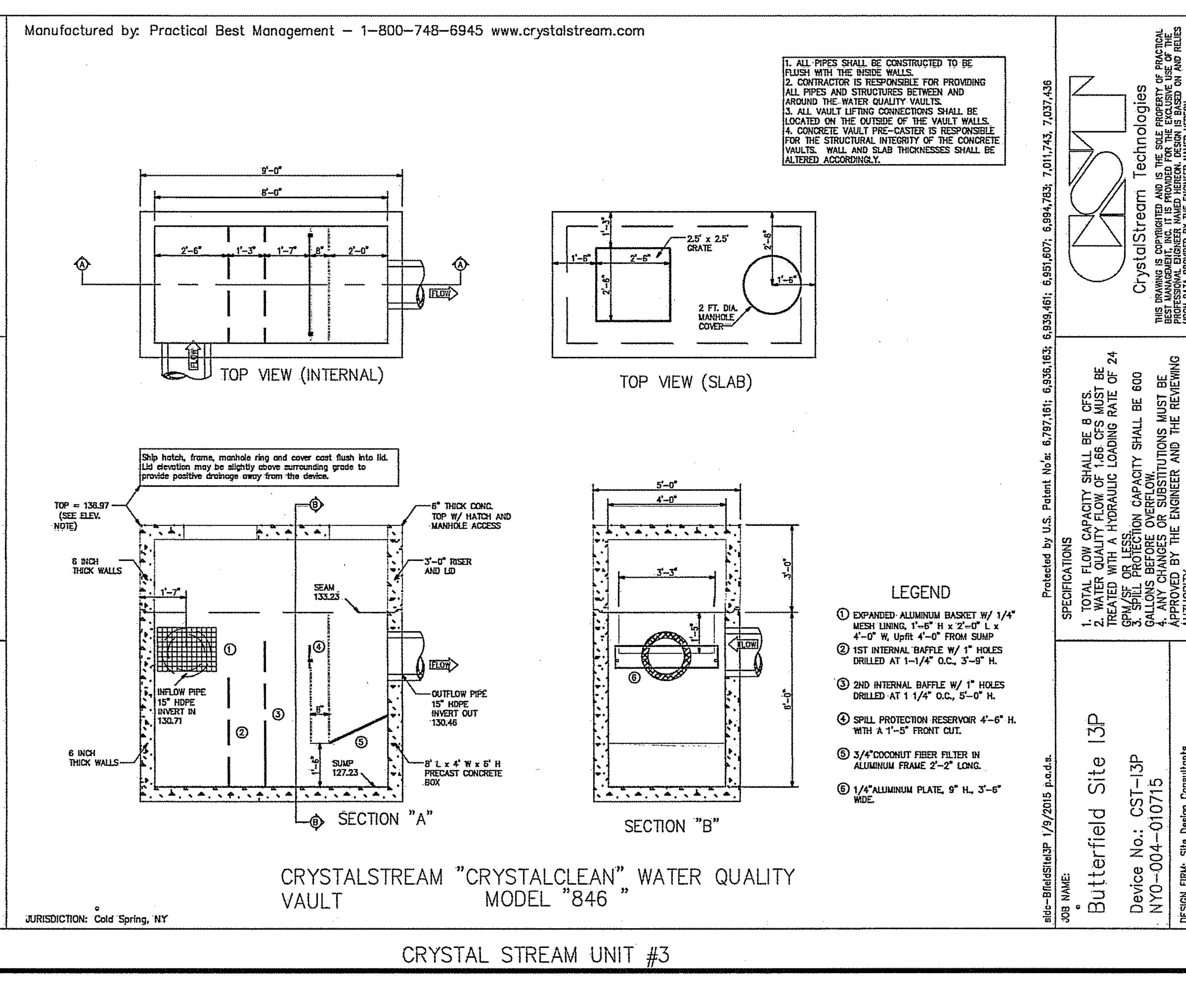

CRYSTAL STREAM UNIT #3

POST CONSTRUCTION CRYSTAL STREAM TECHNOLOGIES INSPECTION AND MAINTENANCE NOTES

3.1 INSPECTION OVERVIEW

THE UNIT IS DESIGNED AND SPECIFIED IN MOST APPLICATIONS TO COMPLY WITH THE NON-POINT SOURCE MANDATES OF THE CLEAN WATER ACT AND THE NPDES REGULATIONS. THESE REGULATIONS STATE THAT ANY BMP (BEST MANAGEMENT PRACTICE) NEEDS TO BE INSPECTED EVERY 90 DAYS AND CLEANED AND MAINTAINED AS NEEDED. MANY LOCAL REGULATIONS HAVE SIMILAR REQUIREMENTS AND ALL FEDERAL, STATE AND LOCAL REQUIREMENTS MUST BE MET. CRYSTALSTREAM TECHNOLOGIES RECOMMENDS VISUAL INSPECTION ON A 30-DAY CYCLE AS WELL AS SEDIMENT DEPTH INSPECTION, DURING THE CONSTRUCTION PHASE. THE UNIT INSPECTION IS DONE TO DETERMINE THE OPERATIONAL STATUS OF THE UNIT AND DETERMINE IF A CLEANING CYCLE IS NECESSARY AS WELL AS TO MEET ANY JURISDICTIONAL ORDINANCE REQUIREMENTS. ALL INSPECTIONS MUST BE DOCUMENTED (APPENDIX 2). WHEN CONSTRUCTION HAS BEEN COMPLETED AND THE SITE HAS STABILIZED, THE CST UNIT SHOULD BE INSPECTED EVERY 90 DAYS FOR THE FIRST YEAR AND CLEANED WHEN SEDIMENT REACHES THE MAXIMUM STORAGE CAPACITY.

3.2 INSPECTION PROCEDURES

AS PER THE FOLLOWING:

3.2.1 THE UNIT SHOULD BE VISUALLY INSPECTED FROM THE SURFACE TO DETERMINE THE INTEGRITY OF ACCESS POINTS. LOOK FOR BROKEN HINGES OR BROKEN OR MISSING HANDLES. A QUALIFIED WELDER SHOULD REPAIR ANY BROKEN HINGES IMMEDIATELY. INSPECT BOLTS ON LID ANGLE IRON AND LOOK FOR LOOSE RED HEADS ON ANGLE IRON. REPLACE RED HEADS AS NEEDED. RE-PAINT THE LID, WITH A RUST RESISTANT PAINT AS NECESSARY.
3.2.2 THE ACCESS SHOULD BE OPENED AND SECURED PROPERLY.
3.2.3 A VISUAL INSPECTION SHOULD BE MADE OF THE TRASH BASKET AT THE FRONT OF THE UNIT TO DETERMINE CAPACITY AND TYPE OF MATERIAL TRAPPED.
3.2.4 A VISUAL INSPECTION SHOULD BE MADE OF THE WATER SURFACE IN THE FRONT OF THE UNIT TO DETERMINE OIL SHEEN OR BLANKET.
3.2.5 A VISUAL INSPECTION SHOULD BE MADE OF THE OIL AND HYDROCARBON RESERVOIR TO DETERMINE AMOUNT OF OIL/WATER TRAPPED AND THE HISTORICAL HIGH-WATER LEVEL IN THE UNIT.
3.2.6 A VISUAL INSPECTION OF THE WATER SURFACE IN THE REAR OF THE UNIT SHOULD BE MADE AND ANY POLLUTANTS NOTED.
3.2.7 INSPECT THE ALUMINUM MESH IN THE TRASH BASKET. REPLACE AS NEEDED.
3.2.8 INSPECT THE BASKET FRAME FOR CRACKS OR DAMAGE. REPAIR AS NEEDED.
A VISUAL INSPECTION SHOULD BE MADE OF THE PIPE CONNECTIONS TO THE UNIT AND ANY MATERIAL DECAY OR IMPROPER INSTALLATION NOTED. PIPES SHOULD BE CUT FLUSH WITH THE INTERIOR WALL OF THE UNIT AND PROPERLY MUDDED IN. IF UPON INSPECTION IT IS NOTED THAT THE PIPES ARE NOT CUT FLUSH, OR ARE NOT MUDDED IN, CONTACT THE CONTRACTOR AND REQUIRE THAT HE CORRECT THIS IMMEDIATELY.
3.2.9 INSPECT BAFFLES TO ENSURE THAT THEY ARE PROPERLY SEATED INTO THE BRACKETS. ALSO NOTE IF THERE IS ANY DAMAGE TO BAFFLES (BOWING). RESEAT BAFFLES IF NECESSARY.
3.2.10 INSPECT OIL RESERVOIR FOR CRACKS OR DAMAGE. CHECK THE WELDS AROUND THE OIL RESERVOIR FOR WEAR OR DAMAGE AND NOTE ANY REPAIR WORK NECESSARY. A QUALIFIED WELDER MUST PERFORM ALL REPAIR WORK TO THE WELDS ON THE OIL RESERVOIR DURING THE ROUTINE CLEANING.
3.2.11 INSPECT THE RISER FOR CRACKS IN THE CONCRETE WALLS. REPAIR AS REQUIRED DURING THE ROUTINE CLEANING.
3.2.12 A SILT GAUGE SHOULD BE USED TO DETERMINE SEDIMENT DEPTH AS SHOWN IN APPENDIX 1. CHECK THE SILT/SEDIMENT LEVEL BEHIND THE TRASH BASKET AND IN FRONT OF THE OIL RESERVOIR
3.2.13 THE ACCESS FOR CLEANING SHOULD BE EVALUATED AND DOCUMENTED. THE TRUCK CLEANING THESE UNITS REQUIRES A STABLE ROADWAY CAPABLE OF WITHSTANDING 15,000 POUNDS.
3.2.14 ANY CHANGES IN THE AREA TRIBUTARY THAT ARE EVIDENT SHOULD BE NOTED.
3.2.15 REPLACE THE ACCESS POINT COVERS CAREFULLY.
3.2.16 NOTE THE CONDITION OF THE AREA SURROUNDING THE UNIT ON THE INSPECTION REPORT. (EXAMPLE: GRASS, DIRT, ROCKS, SINK HOLES) REPORT ANY HAZARDOUS CONDITIONS TO THE APPROPRIATE SUPERVISOR.
3.2.17 AN INSPECTION REPORT SHOULD BE COMPLETED, WITH A COPY STAYING ON SITE AND A COPY BEING SENT TO THE LOCAL JURISDICTION.

THE INSPECTION PROCEDURES FOR THE TRAFFIC UNITS ARE SIMILAR TO THOSE FOR THE NON- TRAFFIC UNITS WITH THE EXCEPTION OF THE SEDIMENT DEPTH EVALUATIONS AS SHOWN IN APPENDIX 1 AND AN INSPECTION OF THE GRATE AND FRAME AND RING AND COVER. ALSO PROPER PRECAUTIONS SHOULD BE TAKEN IN TRAFFIC SITUATIONS AS SPECIFIED IN THE SAFETY SECTION OF THIS MANUAL.

NOTE: WHEN THERE HAS BEEN AN OBVIOUS GASOLINE SPILL OR OTHER FLAMMABLE/HAZARDOUS MATERIAL IN THE UNIT, IMMEDIATE NOTIFICATION SHOULD BE GIVEN TO THE OWNER AND JURISDICTIONAL AUTHORITIES. THIS MANUAL IS FOR ROUTINE CLEANING OF STORM WATER DEBRIS AND ANY UNUSUAL OCCURRENCES SHOULD BE LEFT TO PROPERLY TRAINED AND EQUIPPED INDIVIDUALS.

4.1 CLEANING OVERVIEW

THE CLEANING OF THE UNIT IS THE ESSENTIAL ELEMENT TO THE OPERATIONAL SUCCESS OF THE CRYSTALSTREAM DEVICE. THE POLLUTANT REMOVAL CAPACITY OF THE DEVICE WILL EVENTUALLY CAUSE THE EQUIPMENT TO FAIL WITHOUT PROPER MAINTENANCE AND ADDITIONALLY NOT ACHIEVE THE GOALS OF THE INSTALLATION. THE CLEANING CYCLE IS DEPENDANT ON A NUMBER OF FACTORS INCLUDING POLLUTANT LOAD, RAINFALL, TIME OF YEAR, BASIN CHANGES, UPSTREAM MITIGATION TACTICS AND INSTALLATION. BASED ON THE VARIETY OF FACTORS; A CLEANING SCHEDULE CAN BE CONSISTENT OR VARY WIDELY ON THE SAME DEVICE. THIS HIGHLIGHTS THE IMPORTANCE OF THE INSPECTION PROCESS IN THE OVERALL MAINTENANCE AND INTEGRITY OF THE UNIT. THE CLEANING IS GENERALLY DONE WITH A TWO-PERSON CREW AND A VACUUM PUMP SYSTEM. THE DURATION OF THE MAINTENANCE WILL DEPEND ON A NUMBER OF FACTORS BUT CAN TYPICALLY BE DONE IN ABOUT 2.5 HOURS WITH PROPERLY TRAINED INDIVIDUALS.

4.2 OPTION 1: CLEANING PROCEDURES - SURFACE CLEANING

IF THE CLEANING OF THE UNIT IS TO BE PREFORMED FROM THE SURFACE, THE OPERATOR SHOULD EXPECT A LONGER CLEANING TIME AND THE POTENTIAL FOR ADDITIONAL DISPOSAL CHARGES. THE FRONT CHAMBER OF THE UNIT WILL CONTAIN THE TRASH AND DEBRIS IN THE TRASH BASKET, ANY FLOATING HYDROCARBONS THAT HAVE NOT BEEN SKIMMED INTO THE OIL/HYDROCARBON RESERVOIR AND ACCUMULATED SEDIMENT ON THE BOTTOM OF THE UNIT.

CLEANING PROCEDURES ARE AS PER THE FOLLOWING:

4.2.1 THE UNIT SHOULD BE VISUALLY INSPECTED FROM THE SURFACE TO DETERMINE THE INTEGRITY OF THE TREAD PLATE LID, ALUMINUM HATCH OR OTHER ACCESS.
4.2.2 A VISUAL INSPECTION OF THE UNIT SHOULD BE DONE TO EVALUATE STRUCTURAL INTEGRITY AND DETERMINE IF ANY IMPACTED MATERIAL IS PRESENT IN THE DEVICE. IF THERE HAS BEEN A HAZARDOUS SPILL SEE SECTION 4.6

NOTE: WHEN THERE HAS BEEN AN OBVIOUS GASOLINE SPILL OR OTHER FLAMMABLE/HAZARDOUS MATERIAL IN THE UNIT, IMMEDIATE NOTIFICATION SHOULD BE GIVEN TO THE OWNER AND JURISDICTIONAL AUTHORITIES. THIS MANUAL IS FOR ROUTINE CLEANING OF STORM WATER DEBRIS AND ANY UNUSUAL OCCURRENCES SHOULD BE LEFT TO PROPERLY TRAINED AND EQUIPPED INDIVIDUALS.

4.2.3 THE TRASH BASKET SHOULD BE CLEANED BY EITHER USING A TRASH NETTING SYSTEM OR VACUUM TRUCK. IF CLEANING USING A NETTING SYSTEM, THIS MATERIAL CAN BE DISPOSED OF IN TRASH BAGS IN THE NORMAL MANNER.
4.2.4 THE SURFACE OIL/HYDROCARBON SEPARATION ZONE IN THE FRONT CHAMBER SHOULD BE REMOVED EITHER WITH SORBANTS OR WITH A VACUUM TRUCK.
4.2.5 THE STORMWATER CONTAINED IN THE AREA BETWEEN THE SURFACE WATER AND THE SEDIMENT ACCUMULATION CAN BE DECANTED TO MINIMIZE THE AMOUNT OF DISPOSAL REQUIRED. ANY DOWNSTREAM DISCHARGE NEEDS TO BE AFTER THE SURFACE CLEANING AND ONLY DOWN TO THE LEVEL OF THE BOTTOM OF THE OIL/HYDROCARBON RESERVOIR OR THE TOP OF THE SEDIMENT ACCUMULATION. ANY POLLUTANTS DISCHARGED DOWNSTREAM ARE THE RESPONSIBILITY OF THE CLEANING OPERATOR.
4.2.6 THE OIL/HYDROCARBON RESERVOIR NEEDS TO BE EVACUATED BY THE VACUUM EQUIPMENT.
4.2.7 THE SEDIMENT ACCUMULATED IN THE FRONT AND REAR CHAMBER CAN BE REMOVED BY THE VACUUM EQUIPMENT.
4.2.8 THE UNIT SHOULD BE PRESSURE WASHED DOWN TO REMOVE ANY POLLUTION ATTACHED TO THE BAFFLES, WALLS OR HYDROCARBON RESERVOIR.
4.2.9 ALL PARTS SHOULD BE INSPECTED FOR WEAR AND TEAR AND DOCUMENTED.

4.2.10 A MAINTENANCE REPORT (APPENDIX 3) SHOULD BE COMPLETED, WITH A COPY STAYING ON SITE AND A COPY BEING SENT TO THE LOCAL JURISDICTION.

4.3 OPTION 2: CLEANING PROCEDURES - CONFINED SPACE ENTRY

THE CLEANING PROCEDURES ARE SIMILAR FOR CONFINED SPACE ENTRIES EXCEPT THAT THE OSHA GUIDELINE APPLY AND NEED TO BE FOLLOWED. THE CONFINED SPACE ENTRY ALLOWS THE CREW TO DO A BETTER JOB OF CLEANING THE UNIT AND ALLOWS FOR THE TIME NEEDED AND DISPOSAL COST TO BE REDUCED.

CAUTION! ANY INSPECTION DONE IN A TRAFFIC AREA MUST MEET THE DOT GUIDELINES FOR ROADWAY WORK AND ADDITIONAL SAFETY PROCEDURE WILL BE NECESSARY.

CAUTION ! ALL OSHA CONFINED SPACE REQUIREMENTS SHOULD BE MET WHILE CLEANING THIS UNIT. AS PER THE FOLLOWING:

4.3.1 THE UNIT SHOULD BE VISUALLY INSPECTED FROM THE SURFACE TO DETERMINE THE INTEGRITY OF THE TREAD PLATE LID.
4.3.2 A VISUAL INSPECTION OF THE UNIT SHOULD BE DONE TO EVALUATE STRUCTURAL INTEGRITY AND DETERMINE IF ANY IMPACTED MATERIAL IS PRESENT IN THE DEVICE. IF THERE HAS BEEN A HAZARDOUS SPILL SEE SECTION 4.6

NOTE: WHEN THERE HAS BEEN AN OBVIOUS GASOLINE SPILL OR OTHER FLAMMABLE/HAZARDOUS MATERIAL IN THE UNIT, IMMEDIATE NOTIFICATION SHOULD BE GIVEN TO THE OWNER AND JURISDICTIONAL AUTHORITIES. THIS MANUAL IS FOR ROUTINE CLEANING OF STORM WATER DEBRIS AND ANY UNUSUAL OCCURRENCES SHOULD BE LEFT TO PROPERLY TRAINED AND EQUIPPED INDIVIDUALS.

4.3.3 A LADDER SHOULD BE INSERTED ON THE FRONT SIDE OF THE UNIT BETWEEN THE BAFFLES AND A SORBANT BLANKET LAID ON THE SURFACE OF THE WATER TO COLLECT ANY FREE OIL FLOATING ON THE SURFACE.
4.3.4 IN MOST UNITS, THE TRASH BASKET AND BAFFLES CAN BE REMOVED TO ALLOW EASIER ACCESS TO THE BOTTOM OF THE UNIT.
4.3.5 INSPECT THE ALUMINUM MESH IN THE TRASH BASKET. REPLACE AS NEEDED.
4.3.6 THE TRASH BASKET SHOULD BE CLEANED AND DIRECTLY DISPOSED OF IN GARBAGE BAGS.
4.3.7 THE STORMWATER CONTAINED IN THE AREA BETWEEN THE SURFACE WATER AND THE SEDIMENT ACCUMULATION CAN BE DECANTED TO MINIMIZE THE AMOUNT OF DISPOSAL REQUIRED. ANY DOWNSTREAM DISCHARGE NEEDS TO BE AFTER THE SURFACE CLEANING AND ONLY DOWN TO THE LEVEL OF THE BOTTOM OF THE OIL/HYDROCARBON RESERVOIR OR THE TOP OF THE SEDIMENT ACCUMULATION. ANY POLLUTANTS DISCHARGED DOWNSTREAM ARE THE RESPONSIBILITY OF THE CLEANING OPERATOR.
4.3.8 THE UNIT SHOULD BE PRESSURE WASHED DOWN TO REMOVE ANY POLLUTION ATTACHED TO THE BAFFLES, WALLS OR HYDROCARBON RESERVOIR.
4.3.9 THE LADDER CAN BE USED TO GET ON TO THE UNIT FLOOR AND REMOVE THE REST OF THE WATER AND SEDIMENT FROM THE BOTTOM OF THE UNIT.
4.3.10 THE WALLS SHOULD BE WIPED DOWN IN THE FRONT WITH A SORBANT BLANKET
4.3.11 THE FRESH COCONUT FIBER MESH SHOULD BE REPLACED IN THE FRAME AND THE FRAME ASSEMBLY RETURNED TO THE UNIT.
4.3.12 ALL PARTS SHOULD BE INSPECTED FOR WEAR AND TEAR AND DOCUMENTED.
4.3.13 REMOVE ALL EQUIPMENT FROM THE UNIT. REPLACE THE MANHOLE COVER AND THE GRATE IN THE CONCRETE LID.
4.3.14 A MAINTENANCE REPORT (APPENDIX 3) SHOULD BE COMPLETED, WITH A COPY STAYING ON SITE AND A COPY BEING SENT TO THE LOCAL JURISDICTION.

CLEANING EQUIPMENT

THE EQUIPMENT NEEDED TO CLEAN THE CRYSTALSTREAM UNIT IS:

- VACUUM TRUCK 750 GALLON
- PRESSURE WASHER
- SUBMERSIBLE PUMP
- GENERATOR
- SORBANT PADS (MYCELX™)
- 16-25 FT. LADDER
- GLOVES
- COCONUT FIBER MESH (ROLANKA INDUSTRIES)
- TRASH BAGS
- CRYSTALSTREAM LID HOOKS
- SEDIMENT/SILT GAUGE
- RUBBER BOOTS
- TESTING EQUIPMENT TO MEET OSHA CONFINED SPACE ENTRY REQUIREMENTS
- CONES
- BARRICADES
- CAUTION TAPE
- HARDHAT
- WATERPROOF SILICON CAULK
- ALUMINUM MESH (FOR TRASH BASKET)
- FLAT SHOVEL
- 20' ELECTRICAL CORD
- 5 GALLON BUCKET W/ROPE
- FIRST AID KIT CONTAINING EYE WASH
- TRIPOD SAFETY HARNESS RECOVERY APPARATUS

CALL CRYSTALSTREAM AT 1-800-748-6945 IF YOU NEED SUPPLIES OR PARTS.

PUTNAM COUNTY DEPARTMENT OF HEALTH
DIVISION OF ENVIRONMENTAL HEALTH SERVICES
These plans are hereby approved pursuant to Part 5 of the New York State Sanitary Code, Article 17 of the New York State Environmental Conservation Law and Article ___ of the Putnam County Sanitary Code, subject to the provisions of the Letter of Approval issued this date. See first sheet for signature.

DOCUMENTATION AND DISPOSAL

THE CLEANING OF THE UNIT SHOULD BE DOCUMENTED AND THE CONTENTS OF THE UNIT ESTIMATED AND RECORDED IN A LOG FOR INSPECTIONS. THIS DOCUMENTATION SHOULD MEET FEDERAL, STATE AND LOCAL GUIDELINES.

THE DISPOSAL OF THE TRASH, DEBRIS, WATER AND SEDIMENT SHOULD BE DONE AT AN APPROVED FACILITY AND THE PROPER PERMITS SHOULD BE OBTAINED TO TRANSPORT THE MATERIAL. SEDIMENT AND WATER SHOULD BE DISPOSED OF IN ACCORDANCE WITH ALL APPLICABLE STATE AND LOCAL REGULATIONS. SEDIMENT SHOULD BE REMOVED TO A LANDFILL AND LIQUIDS TO A DECANTING FACILITY.

HAZARDOUS WASTE PROCEDURE

THE PRESENCE OF ANY HAZARDOUS MATERIAL INSIDE THE UNIT SHOULD PROMPT AN IMMEDIATE CALL TO THE JURISDICTION AND AN APPROPRIATE HAZARDOUS RESPONSE TEAM. THIS MATERIAL IS NOT PART OF THE STANDARD CLEANING OF THE DEVICE AND SHOULD BE TREATED WITH THE PROPER CARE AFFORDED SUCH SPILLS AS PER FEDERAL, STATE AND LOCAL GUIDELINES.

5.1 MAINTENANCE OVERVIEW

ALL OF THE COMPONENTS IN THE UNIT SHOULD BE INSPECTED AT EVERY CLEANING TO DETERMINE WEAR OR DAMAGE. IF ANY COMPONENTS ARE DAMAGED, PLEASE CONTACT CRYSTALSTREAM TECHNOLOGIES FOR AN EVALUATION OF THE DAMAGE AND A MAINTENANCE ESTIMATE.

Crystal Stream Stream Inverts							
Structure	CST ID. #/ MODEL #	Inv. In.	Inv. Out	Rim	L (ft)	S(%)	Size (In)
Crystal Stream Unit # 1	646	113.45	113.30	121.44	5	0.5	15
Crystal Stream Unit # 2A	646	125.38	125.15	130.00	6	0.5	15
Crystal Stream Unit # 2B	646	123.60	123.45	128.22	17	1.08	15
Crystal Stream Unitt # 3	646	130.71	130.46	136.97	4	0.5	15

Site Design Consultants
Civil Engineers • Land Planners
251-F Underhill Avenue, Yorktown Heights, NY 10598
(914) 962-4488 - Fax: (914) 962-7386
www.sitedesignconsultants.com
PROJECT # 14-25
Engineer: Joseph C. Riina, P.E.
NYS Lic. No. 64431

COPYRIGHT © 2012 BY SITE DESIGN CONSULTANTS, ALL RIGHTS RESERVED

Revisions:		
No.	Date	Comments:
1	12-3-14	Revisions per comments from B&L
2	1-9-15	Revisions per comments from B&L
3	2-10-15	Revisions per comments from B&L
4	2-19-15	Parking Schedule
5	3-13-15	Revisions per NYSDOT
6	3-23-15	Revisions per comments from B&L
7	4-23-15	Revisions per comments from PCDOH
8	4-27-15	Revisions per comments from PCDOH meeting

SCALE: NTS
DRAWN BY: EL
DATE: 10/22/14

CRYSTAL STREAM TECHNOLOGIES DETAILS

SITE/SUBDIVISION PLAN
PREPARED FOR
Butterfield Redevelopment Project
1756 NYS ROUTE 9D
Village Of Cold Spring
Putnam County, New York

Sheet C-505

NOTE: UNAUTHORIZED ALTERATIONS OR ADDITIONS TO THIS DRAWING IS A VIOLATION OF SECTION 7209 (2) OF THE NEW YORK STATE EDUCATION LAW.

F:\2014\14-25 BUTTERFIELD REDEVELOPMENT\ENGINEERING\CAD\C3D-14-25 BUTTERFIELD REDEVELOPMENT\14-25 DETAILS UPDATED.DWG

SWM-1 STORMTECH SC-740 CHAMBER SYSTEM PLAN VIEW DETAIL

NOT TO SCALE

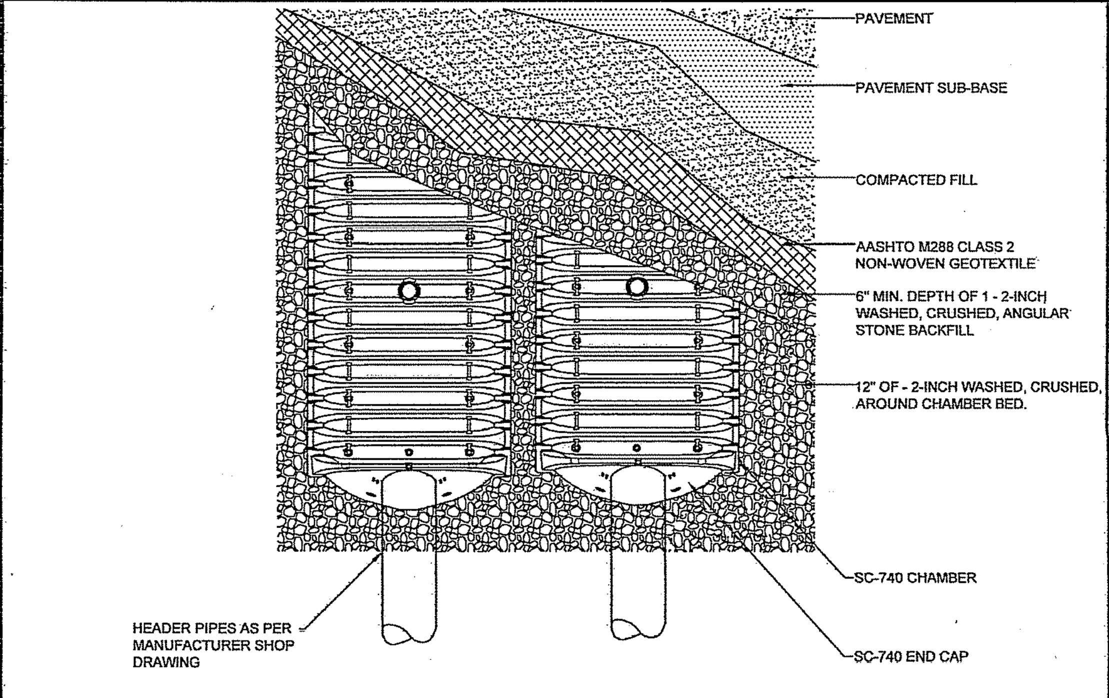

NOTES:
1. All design specifications for Stormtech SC-740 chambers shall be in accordance with the Stormtech design manual.
2. The installation of Stormtech SC-740 chambers shall be in accordance with the latest Stormtech installation instructions.
3. The contractor is advised to review and understand the installation instructions prior to beginning system installation. Call 1-888-892-2694 or visit www.stormtech.com to receive a copy of the latest Stormtech installation instructions.
4. Chambers shall meet the design requirements and load factors specified in Section 12.12 of the latest edition of the AASHTO LRFD bridge design specifications

SWM-4 STORMTECH SC-740 CHAMBER SYSTEM TYPICAL CROSS SECTION

NOT TO SCALE

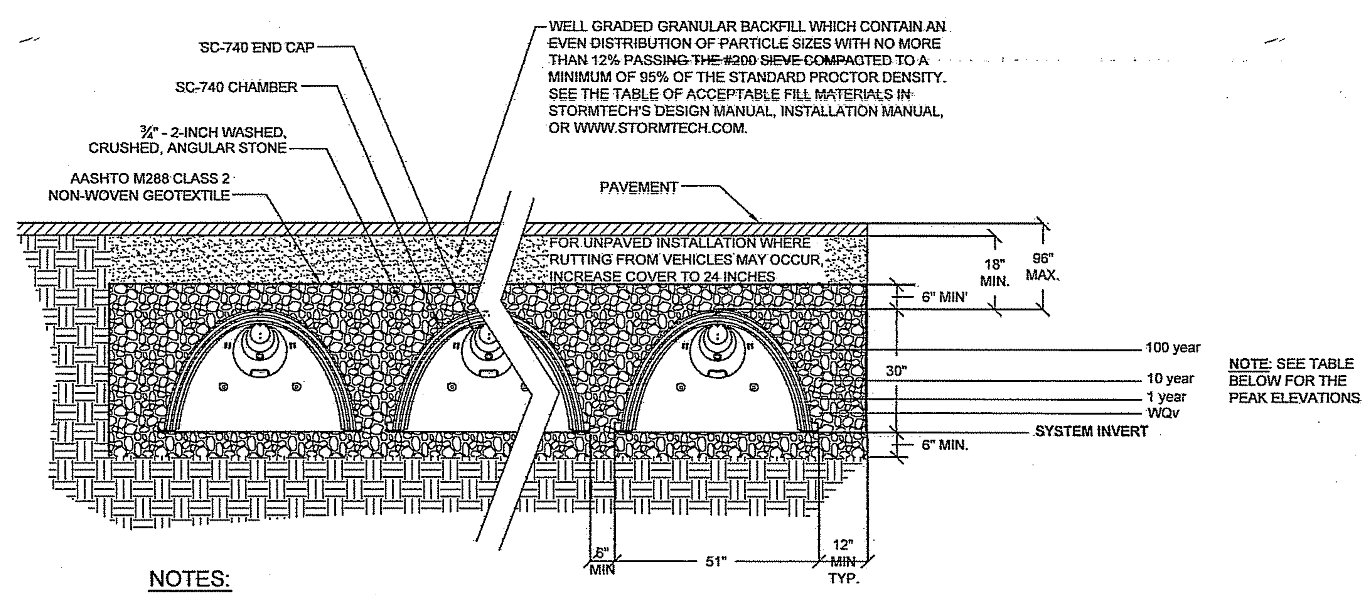

NOTES:
1. All design specifications for Stormtech SC-740 chambers shall be in accordance with the Stormtech design manual.
2. The installation of Stormtech SC-740 chambers shall be in accordance with the latest Stormtech installation instructions.
3. The contractor is advised to review and understand the installation instructions prior to beginning system installation. Call 1-888-892-2694 or visit www.stormtech.com to receive a copy of the latest Stormtech installation instructions.
4. Chambers shall meet the design requirements and load factors specified in Section 12.12 of the latest edition of the AASHTO LRFD bridge design specifications

Stormwater Infiltration Elevations						Peak Elevations			
SYSTEM	System Inv.	Pipe In Size (in)	Inv.	Pipe Out Size (in)	Inv.	WQv (ac-ft)	1 year	10 year	100 year
Infiltrator Sys. #1	111.32	12	112.86	6	113.36	0.168	111.46	111.57	111.69
Infiltrator Sys. #2	121.51	12,12	123.05	6	123.55	0.232	122.83	124.51	124.51
Infiltrator Sys. # 3	129.09	12	130.13	6	131.13	0.316	129.50	131.91	132.09

SWM-7 TYPICAL BIORETENTION DETAIL

NOT TO SCALE

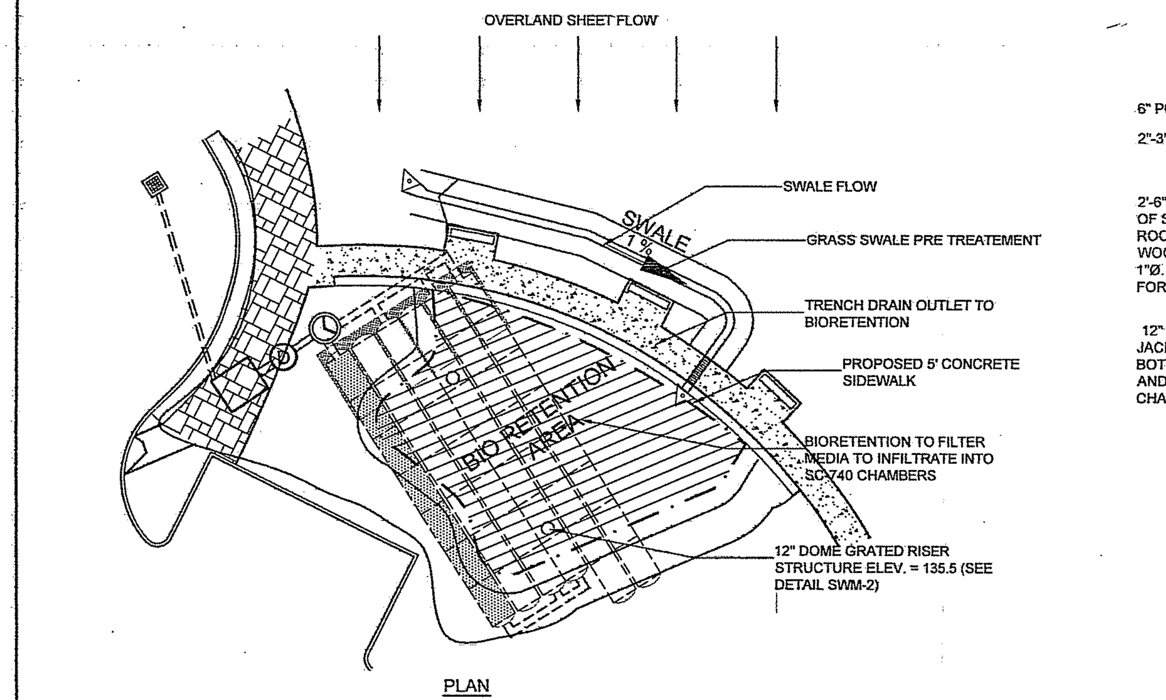

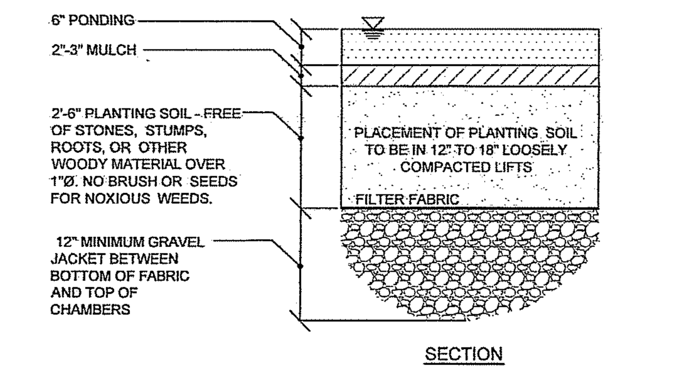

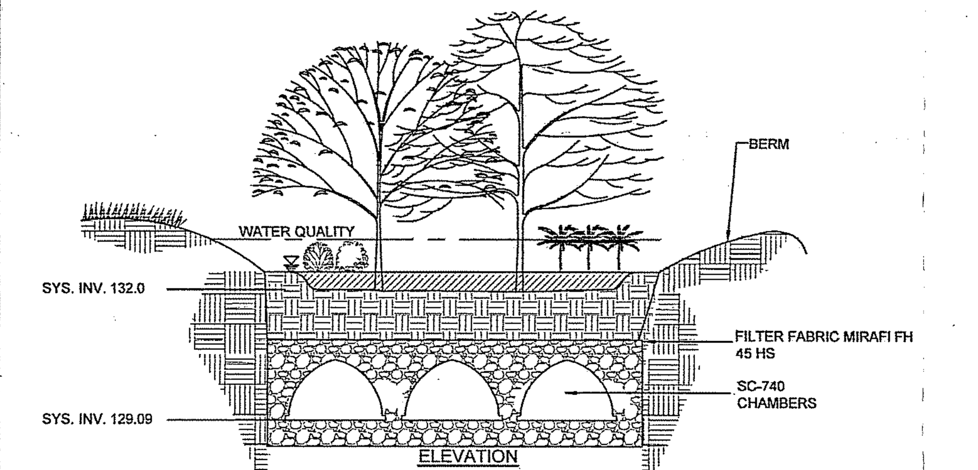

PLANTING SPECIFICATIONS:

- CLASSIFICATION	SM OR ML-UNIFIED SOIL CLASSIFICATION SYSTEM
- PERMEABILITY	1.0 FEET PER DAY OR 0.5% INCHES PER HOUR
- PH RANGE	5.2 TO 7.0%
- ORGANIC MATTER	1.5 TO 4.0%
- MAGNESIUM	35 LBS / ACRE PER MIN.
- PHOSPHORUS	75 LBS / ACRE PER MIN.
- POTASSIUM	85 LBS / ACRE PER MIN.
- SOLUBLE SALTS	≤ 500 PPM
- CLAY	10 TO 25%
- SILT	30 TO 55%
- SAND	35 TO 60%

Bioretention System Elevations						Peak Elevations			
SYSTEM	System Inv.	Pipe In Size (in)	Inv.	Pipe Out Size (in)	Inv.	WQv(ac-ft)	1 year	10 year	100 year
Bio-Retention Garden	132	6	137	N/A	135	0.150	135.54	135.87	136.41

SWM-2 STORMTECH SC-740 INSPECTION PORT/RISER DETAIL

NOT TO SCALE

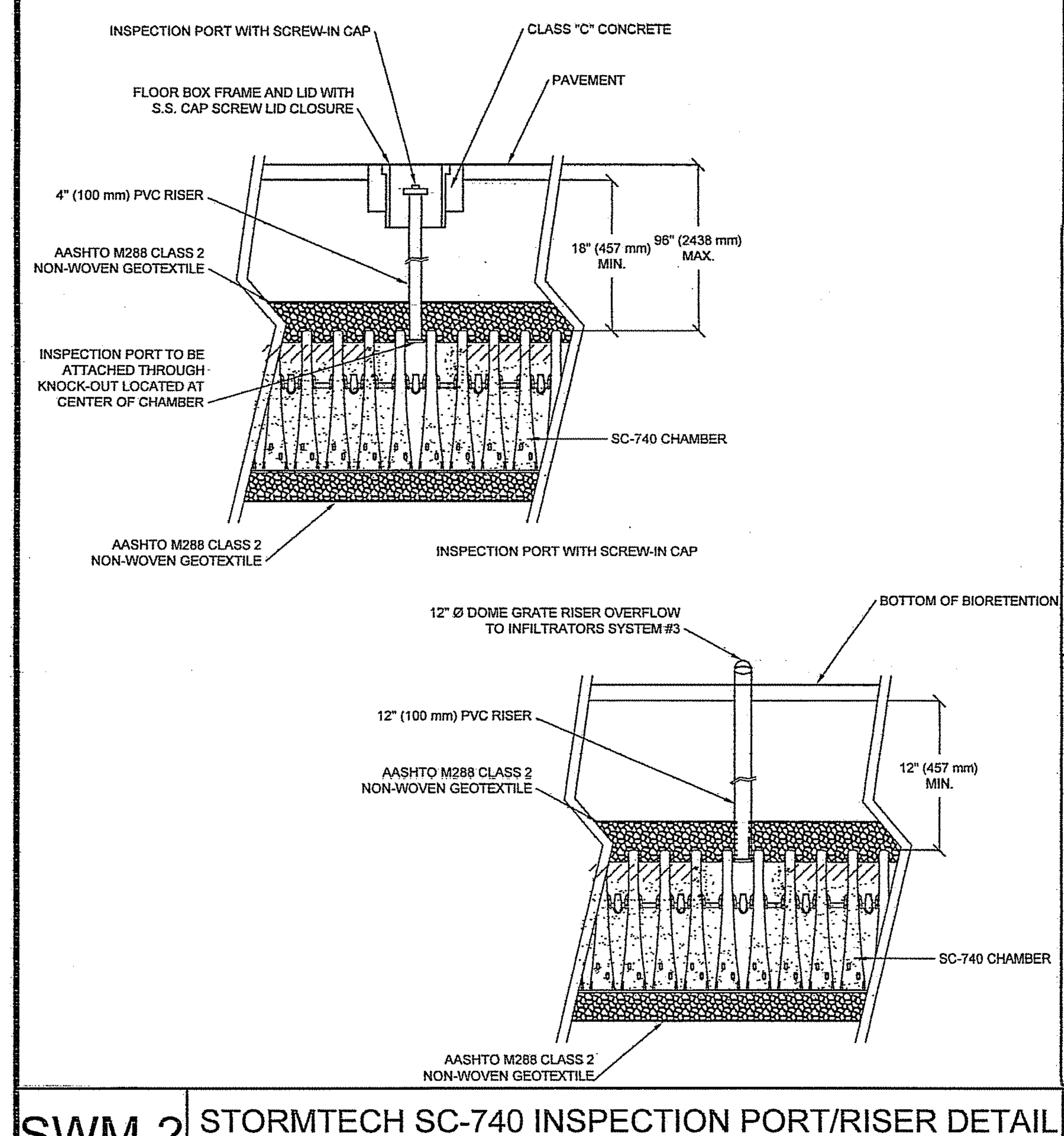

SWM-5 STORMTECH SC-740 CHAMBER DETENTION SYSTEM INLET/OUTLET DETAIL

NOT TO SCALE

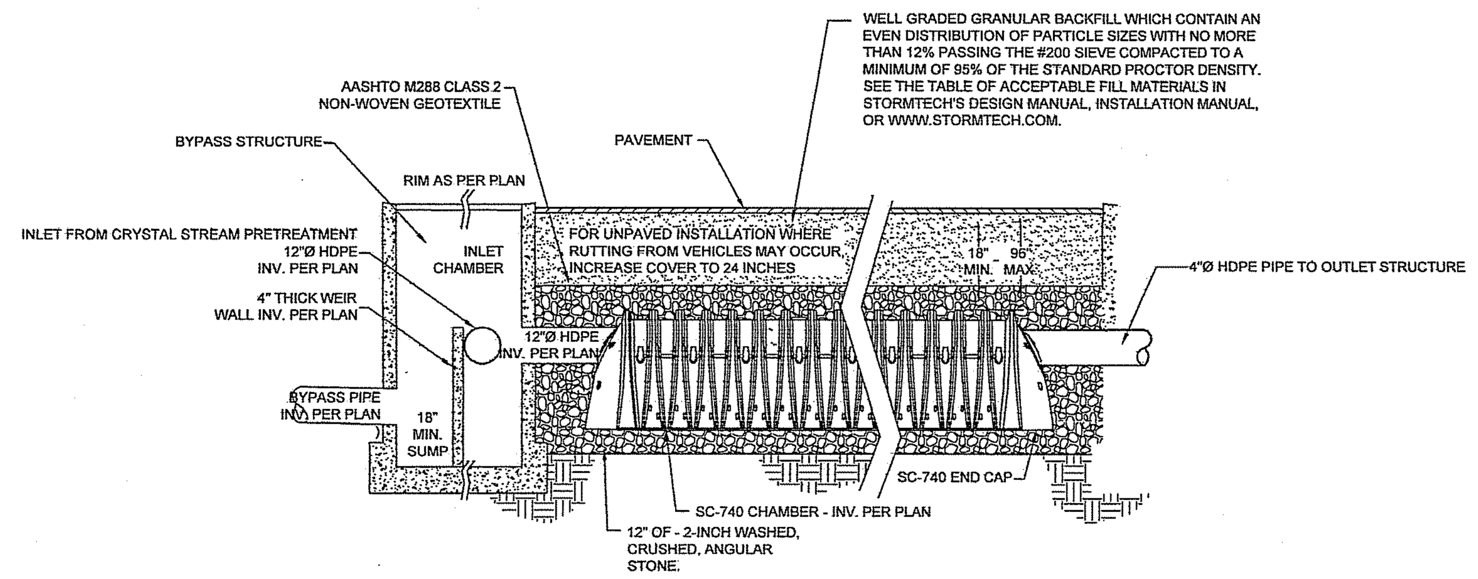

SWM-8 GRASS SWALE DETAIL

NOT TO SCALE

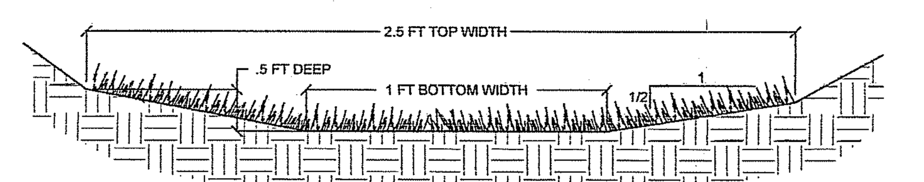

NOTE:
1. Grass swale to be seeded with grass mixture per 1000 S.F as follows:
   Kentucky Bluegrass: .60lbs
   Creeping Red Fescue: .50 lbs
   Perennial Ryegrass: .20lbs
2. The foundation area shall be cleared of trees, stumps,sod, loose rock, or other objectionable materials.
3. The cross section shall be excavated to the neat lines and grades shown on the plans. Over excavated areas shall be backfilled with moist soil compacted to the density of the surrounding material.
4. No abrupt deviations from design grade or horizontal alignment shall be permitted.
5. Construction operations shall be done in such a manner that erosion, air and water pollution will be minimized and held within legal limits. All disturbed areas shall be vegetated or otherwise protected against soil erosion.

SYMBOL

GL

SWM-6 STORMTECH SC-740 CHAMBER DETENTION ISOLATOR ROW DETAIL

NOT TO SCALE

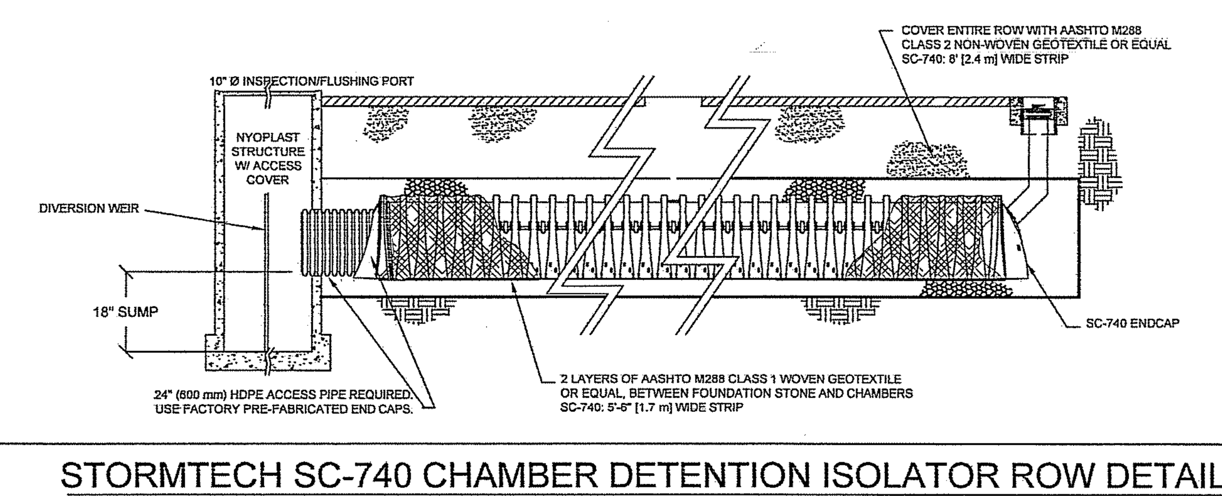

SMW-9 NYLOPLAST DRAINAGE BASIN DETAIL

NOT TO SCALE

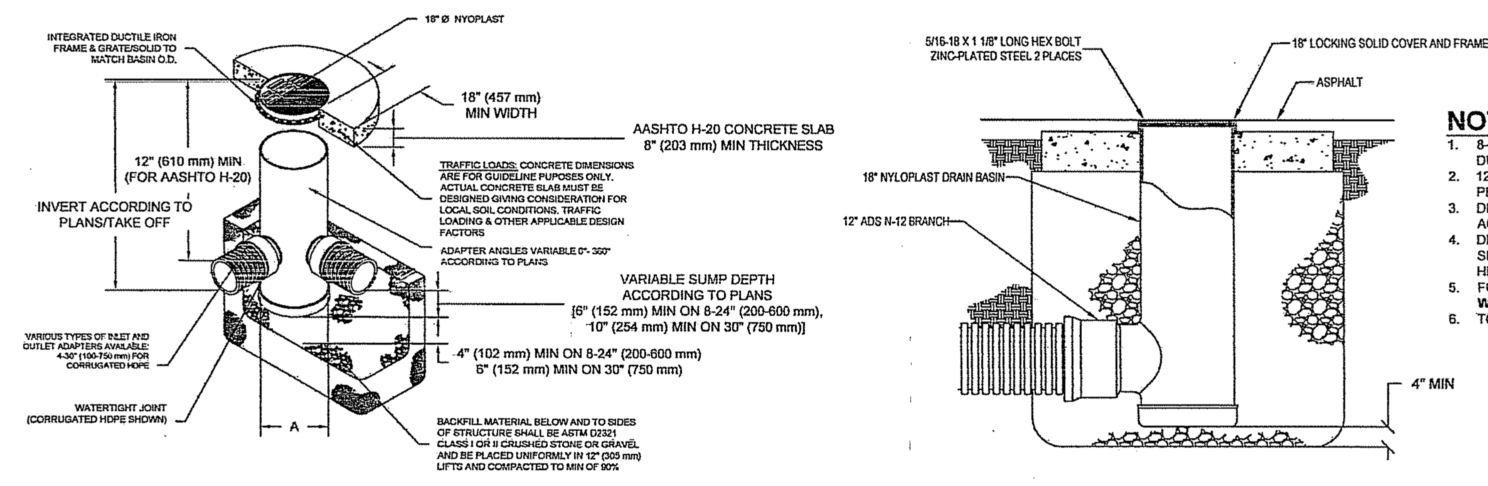

NOTES
1. 8-30" (200-750 mm) GRATES/SOLID COVERS SHALL BE DUCTILE IRON PER ASTM A536 GRADE 70-50-05
2. 12-30" (300-750 mm) FRAMES SHALL BE DUCTILE IRON PER ASTM A536 GRADE 70-50-05
3. DRAIN BASIN TO BE CUSTOM MANUFACTURED ACCORDING TO PLAN DETAILS
4. DRAINAGE CONNECTION STUB JOINT TIGHTNESS SHALL CONFORM TO ASTM D3212 FOR CORRUGATED HDPE (ADS & HANCOR DUAL WALL) & SDR 35 PVC
5. FOR COMPLETE DESIGN AND PRODUCT INFORMATION: WWW.NYLOPLAST-US.COM
6. TO ORDER CALL: 800-821-6710

SWM-3 STORMTECH SC-740 CHAMBER DETAIL

NOT TO SCALE

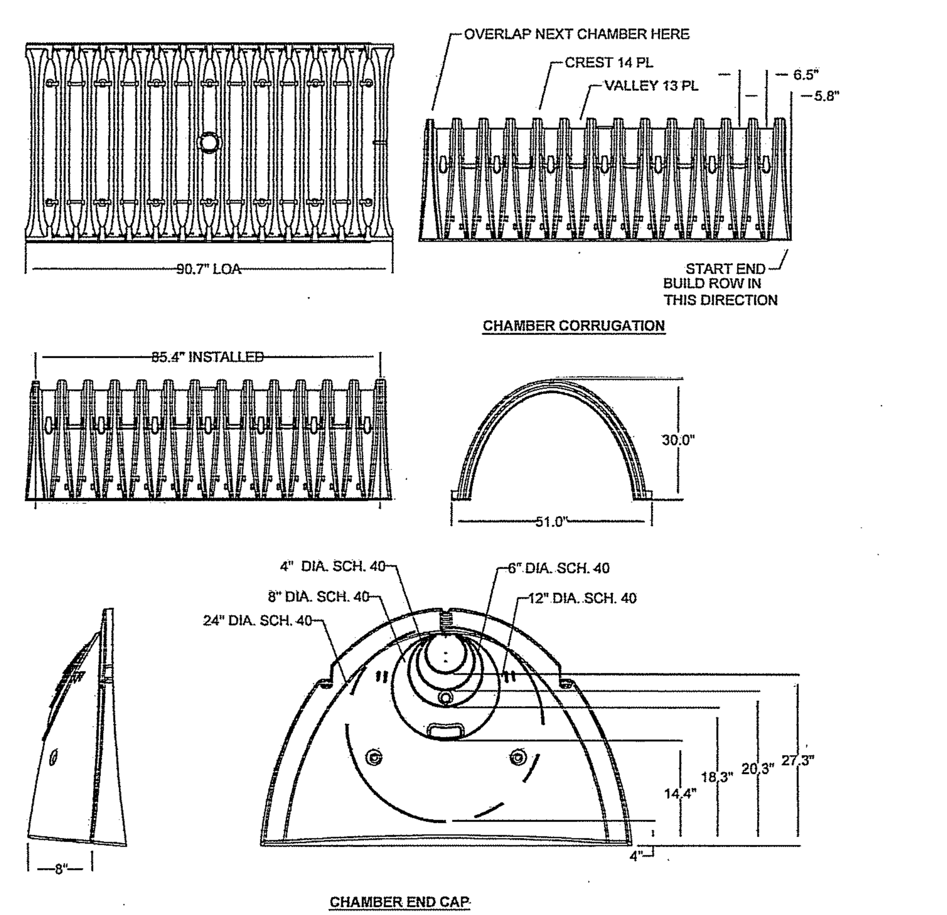

NOMINAL CHAMBER SPECIFICATIONS SIZE (W x H x INSTALLED LENGTH)	51.0" x 30.0" x 85.4"
CHAMBER STORAGE	45.9 CUBIC FEET
MINIMUM INSTALLED STORAGE	74.9 CUBIC FEET
WEIGHT	75 LBS.

D-1 BYPASS STRUCTURE DETAIL

NOT TO SCALE

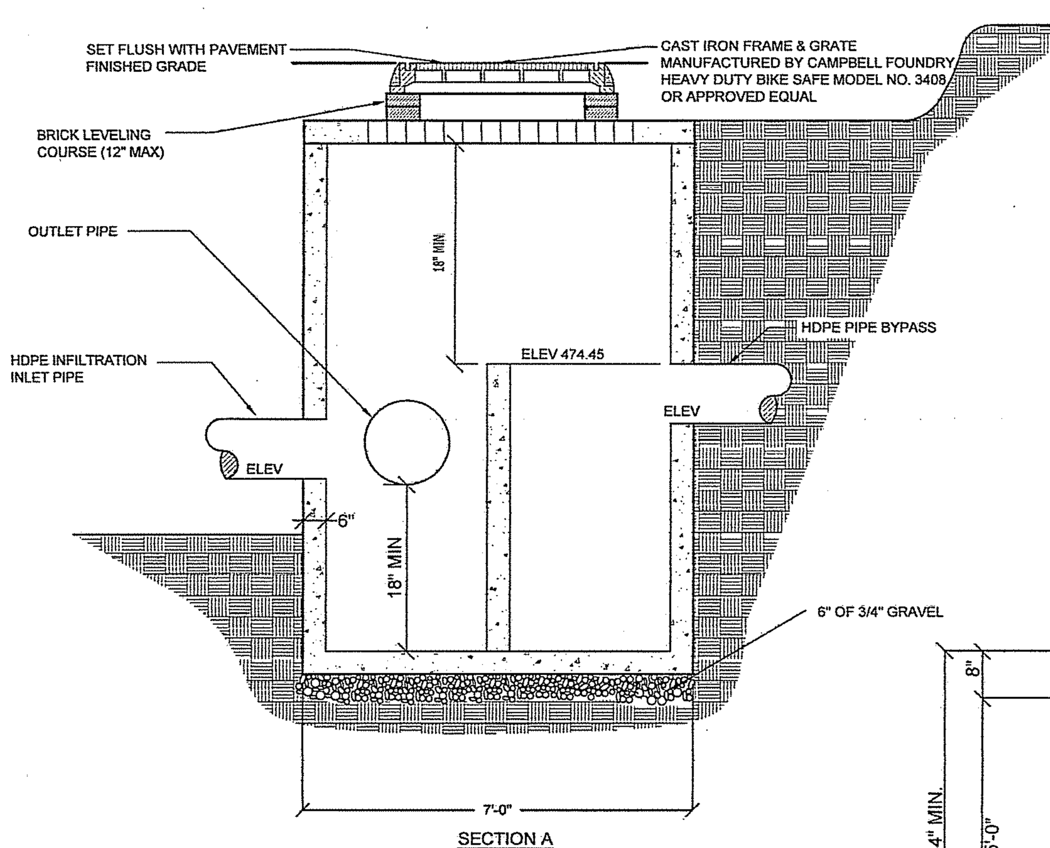

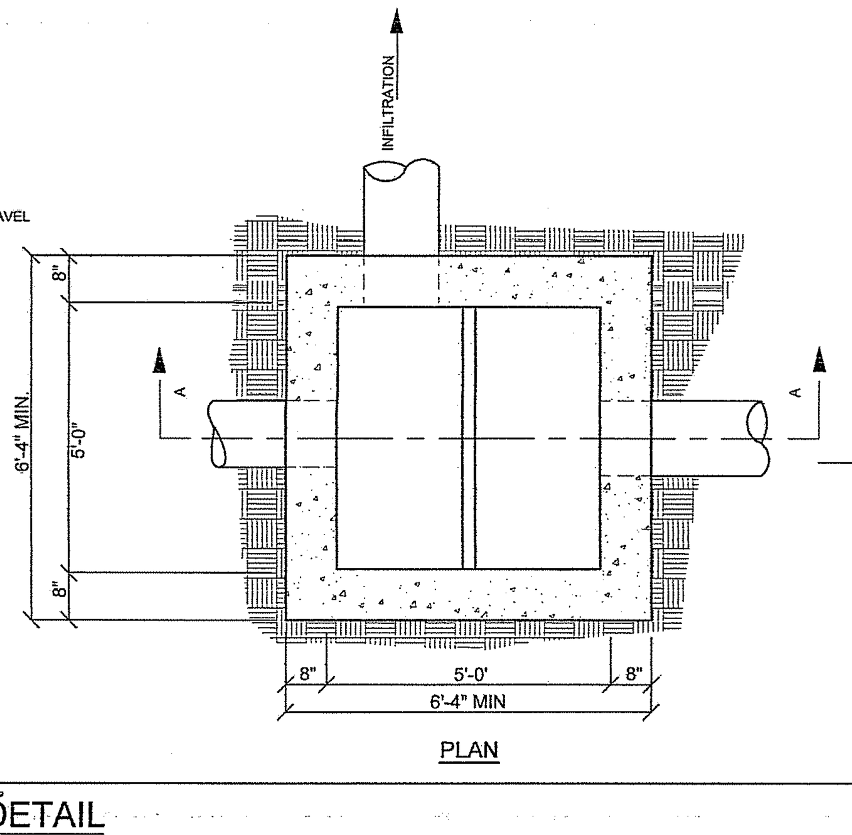

NOTE:
1. Benchmark elevation to be added to outlet structure for measuring sediment accumulations.

BYPASS STRUCTURES	INVERT ELEVATIONS				
SYSTEM	RIM	SUMP	WEIR	PIPE TO INFIL.	BYPASS PIPE
BYPASS 1	121.70	111.67	114.61	112.86	113
BYPASS 2A	129.77	122.37	124.8	123.37	124.5
BYPASS 2B	127.14	122.09	124.8	123.05	123.09
BYPASS 3	136.97	129.1	131.88	130.13	130.16

SWM-10 GRASS LEVEL-LIP SPREADER DETAIL

NOT TO SCALE

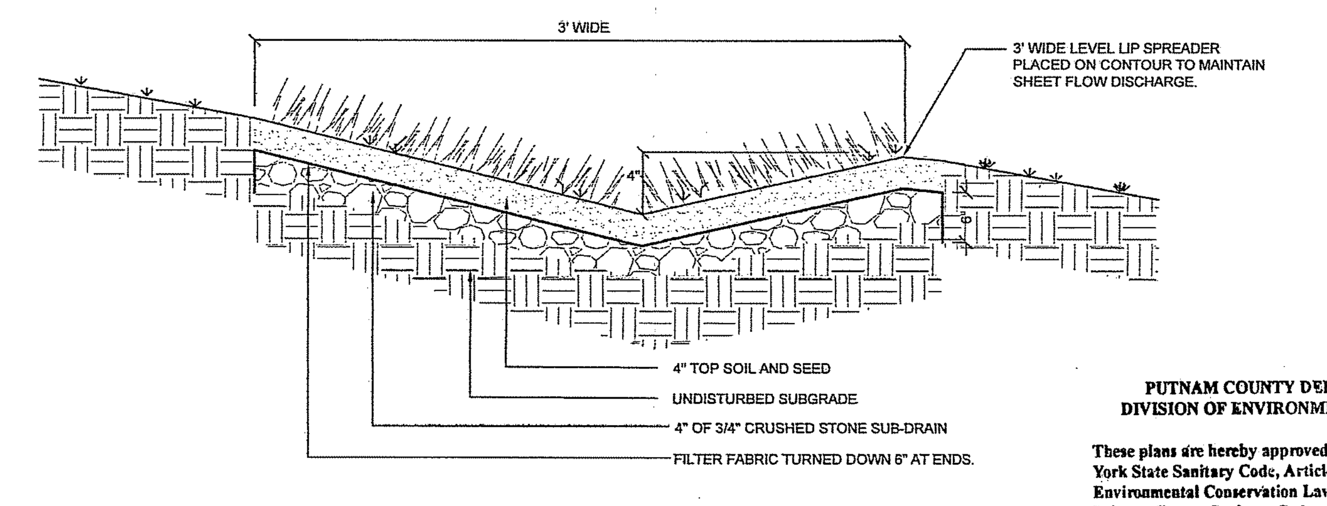

NOTES:
1. The foundation area shall be cleared of trees, stumps,sod, loose rock, or other objectionable materials.
2. The cross section shall be evacuated to the neat lines and grades shown on the plans. Over excavated areas shall be backfilled with moist soil compacted to the density of the surrounding material.
3. Filter and bedding shall be placed to line and grade in the manner specified.
4. No abrupt deviations from design grade or horizontal alignment shall be permitted.
5. Construction operations shall be done in such a manner that erosion, air and water pollution will be minimized and held within legal limits. All disturbed areas shall be vegetated or otherwise protected against soil erosion.

SYMBOL

G

PUTNAM COUNTY DEPARTMENT OF HEALTH
DIVISION OF ENVIRONMENTAL HEALTH SERVICES

These plans are hereby approved pursuant to Part 5 of the New York State Sanitary Code, Article 17 of the New York State Environmental Conservation Law and Article 8 of the Putnam County Sanitary Code, subject to the provisions of the Letter of Approval issued this date. See first sheet for signature.

Site Design Consultants
Civil Engineers • Land Planners
251-F Underhill Avenue, Yorktown Heights, NY 10598
(914) 962-4488 - Fax: (914) 962-7386
www.sitedesignconsultants.com

PROJECT # 14-25

Engineer: Joseph C. Riina, P.E. NYS Lic. No. 64431

Revisions:

No.	Date	Comments:
1	12-3-14	Revisions per comments from B&L
2	1-9-15	Revisions per comments from B&L
3	2-10-15	Revisions per comments from B&L
4	2-19-15	Parking Schedule
5	3-13-15	Revisions per NYSDOT
6	3-23-15	Revisions per comments from B&L
7	4-23-15	Revisions per comments from PCDOH
8	4-27-15	Revisions per comments from PCDOH meeting

SCALE: NTS
DRAWN BY: EL
DATE: 10/22/14

STORMWATER MANAGEMENT DETAILS

SITE/SUBDIVISION PLAN
PREPARED FOR
Butterfield Redevelopment Project
1756 NYS ROUTE 9D
Village Of Cold Spring — Putnam County, New York

Sheet C-506

COPYRIGHT © 2012 BY SITE DESIGN CONSULTANTS, ALL RIGHTS RESERVED

NOTE: UNAUTHORIZED ALTERATIONS OR ADDITIONS TO THIS DRAWING IS A VIOLATION OF SECTION 7209 (2) OF THE NEW YORK STATE EDUCATION LAW.

F:\2014\14-25 BUTTERFIELD REDEVELOPMENT\ENGINEERING\CAD\C3D-14-25 BUTTERFIELD REDEVELOPMENT\14-25 DETAILS UPDATED.DWG

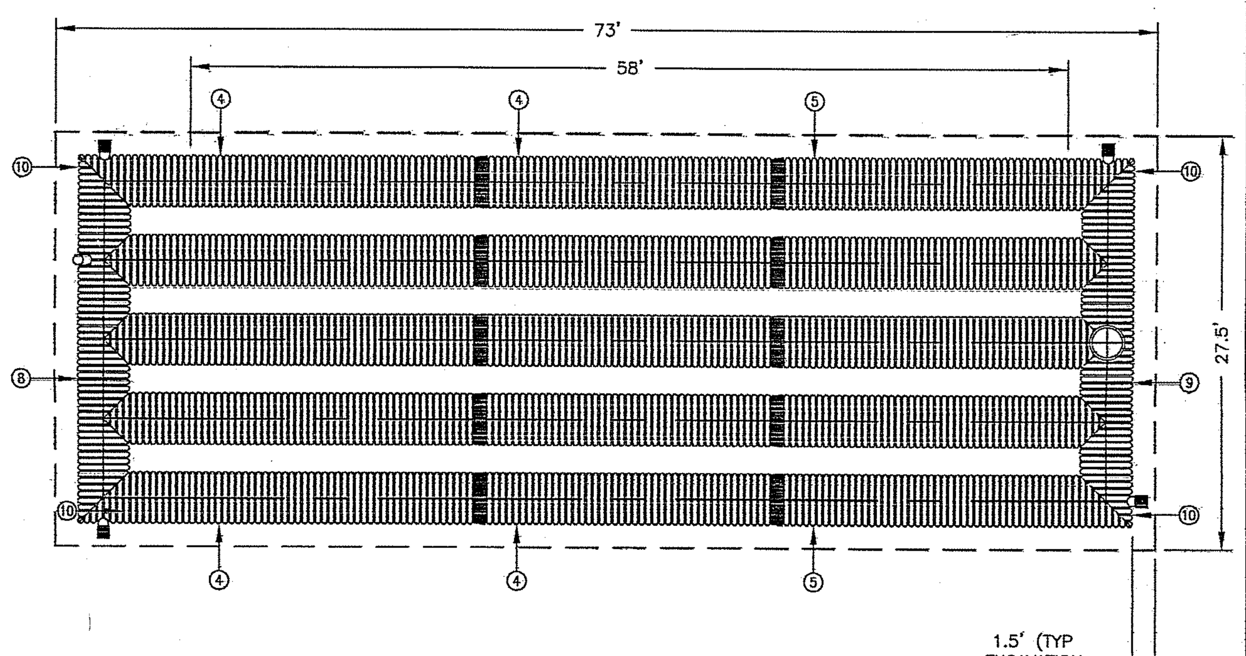

RAINWATER HARVESTING #2 36 INCH STORAGE CHAMBER

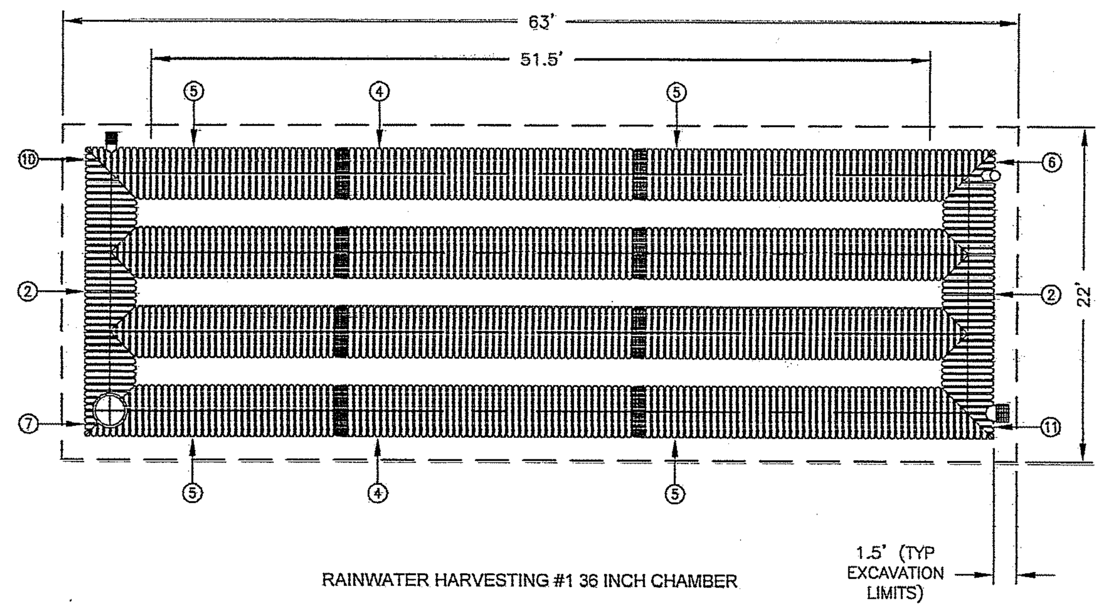

RAINWATER HARVESTING #1 36 INCH CHAMBER

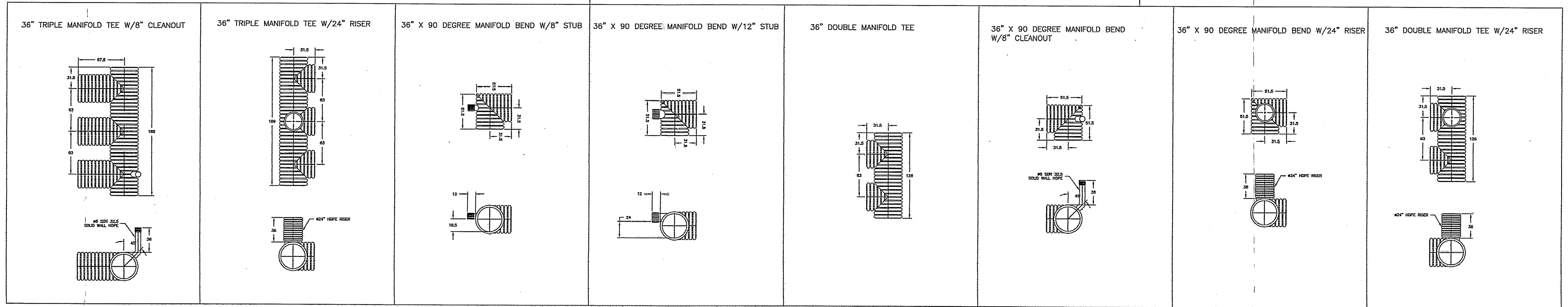

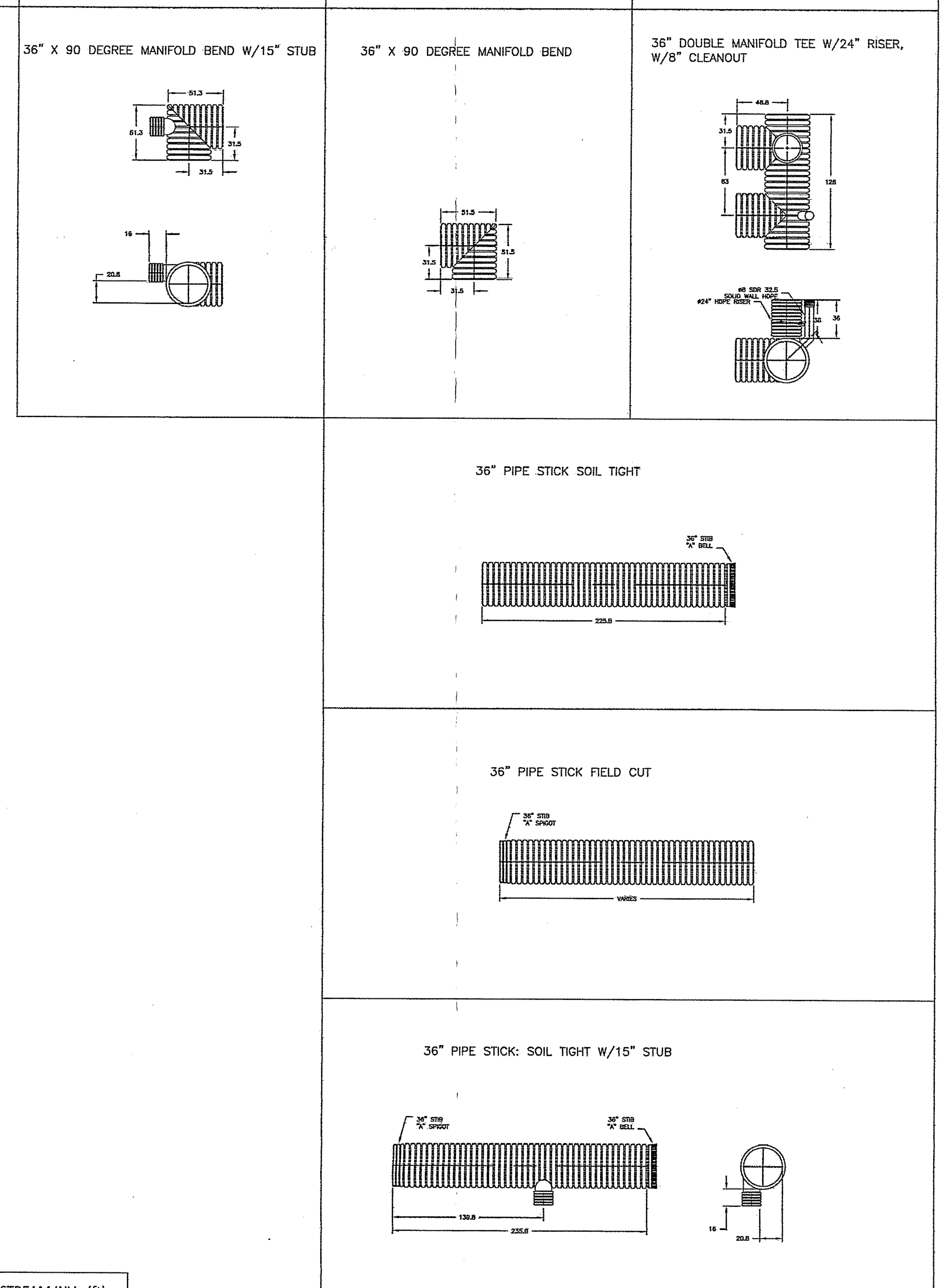

BILL OF MATERIALS 36" CHAMBERS						
*THE COMPONENTS AND QUANTITIES LISTED HERIN ARE NOT INTENDED TO BE A COMPREHENSIVE MATERIAL LIST. EXTRA COMPONENTS, NOT LISTED HEREIN, MAY BE NECESSARY TO COMPLETE THE CONSTRUCTION OF THE SYSTEM.						
ITEM	QTY	PART #	DESCRIPTION	MATERIAL	VENDOR	NOTE
1	1	3652ANC 1	36" DOUBLE MANIFOLD TEE W/24" RISER			See Detail
2	4	3652AN	36" DOUBLE MANIFOLD TEE			See Detail
3	3	3698AN	36" X 90 DEGREE MANIFOLD BEND			See Detail
4	17	Stick 1	36" PIPE STICK : SOIL TIGHT			See Detail
5	25	Stick 2	36" PIPE STICK : SOIL TIGHT (FIELDCUT)			See Detail
6	2	3698ANC 1	36" X 90 DEGREE MANIFOLD BEND W/8" CLEANOUT			See Detail
7	1	3698ANC 2	36" X 90 DEGREE MANIFOLD BEND W/24" RISER			See Detail
8	1	3653ANC 1	36" TRIPLE MANIFOLD TEE W/8" CLEANOUT			See Detail
9	1	3653ANC 2	36" TRIPLE MANIFOLD TEE W/24" RISER			See Detail
10	5	3698ANC 3	36" X 90 DEGREE MANIFOLD BEND W/8" STUB			See Detail
11	2	3698ANC 4	36" X 90 DEGREE MANIFOLD BEND W/12" STUB			See Detail
12	1	3698ANC 5	36" X 90 DEGREE MANIFOLD BEND W/15" STUB			See Detail
13	1	Stick 3	36" PIPE STICK : SOIL TIGHT W/15" STUB			See Detail
14	1	3652ANC 2	36" DOUBLE MANIFOLD TEE W/24" RISER, W/8" CLEANOUT			See Detail
15	50	3665AA	36" SPLIT COUPLER			STANDARD

ADS RETENTION/DETENTION PIPE SYSTEM SPECIFICATION

SCOPE
THIS SPECIFICATION DESCRIBES ADS RETENTION/DETENTION PIPE SYSTEMS FOR USE IN NON-PRESSURE GRAVITY-FLOW STORM WATER COLLECTION SYSTEMS UTILIZING A CONTINUOUS OUTFALL STRUCTURE.

PIPE REQUIREMENTS
ADS RETENTION/DETENTION SYSTEMS MAY UTILIZE ANY OF THE VARIOUS PIPE PRODUCTS BELOW:
- N-12® WT IB PIPE (PER AASHTO) SHALL MEET AASHTO M294, TYPE S OR ASTM F2306
- N-12® WT IB PIPE (PER ASTM F2648) SHALL MEET ASTM F2648
- N-12® MEGA GREEN™ WT IB SHALL MEET ASTM F2648

ALL PRODUCTS SHALL HAVE A SMOOTH INTERIOR AND ANNULAR EXTERIOR CORRUGATIONS. WT IB PIPE PRODUCTS ARE ONLY AVAILABLE AS NON-PERFORATED. PRODUCT-SPECIFIC PIPE SPECIFICATIONS ARE AVAILABLE IN THE DRAINAGE HANDBOOK SECTION 1 *SPECIFICATIONS*

JOINT PERFORMANCE
WATERTIGHT (WT IB):
WT IB PIPE SHALL BE JOINED USING A BELL & SPIGOT JOINT. THE JOINT SHALL BE WATERTIGHT ACCORDING TO THE REQUIREMENTS OF ASTM D3212 GASKETS SHALL MEET THE REQUIREMENTS OF ASTM F477. 12 - THROUGH 60 - INCH (300 TO 1500MM) DIAMETERS SHALL HAVE A BELL REINFORCED WITH A POLYMER COMPOSITE BAND. THE BELL TOLERANCE DEVICE SHALL BE INSTALLED BY THE MANUFACTURER.

PIPE & FITTING CONNECTIONS SHALL BE WITH A BELL AND SPIGOT CONNECTION UTILIZING A SPUN-ON OR WELDED BELL AND VALLEY OR SADDLE GASKET. THE JOINT SHALL MEET THE WATERTIGHT REQUIREMENTS OF ASTM D3212, AND GASKETS SHALL MEET THE REQUIREMENTS OF ASTM F477. REFER TO TECHNICAL NOTE 7.01 *RAINWATER HARVESTING WITH HDPE CISTERNS*.

FITTINGS
FITTINGS SHALL CONFORM TO ASTM F2306 AND MEET JOINT PERFORMANCE INDICATED ABOVE FOR FITTINGS CONNECTIONS. CUSTOM FITTINGS ARE AVAILABLE AND MAY REQUIRE SPECIAL INSTALLATION CRITERION.

INSTALLATION
INSTALLATION SHALL BE IN ACCORDANCE WITH ASTM D2321 AND ADS RECOMMENDED INSTALLATION GUIDELINES, WITH THE EXCEPTION THAT MINIMUM COVER IN NON-TRAFFIC AREAS FOR 12 - THROUGH 60 - INCH (300 TO 1500MM) DIAMETERS SHALL BE ONE FOOT (0.3M). MINIMUM COVER IN TRAFFICKED AREAS FOR 12 - THROUGH 36 - INCH (300 TO 900MM) DIAMETERS SHALL BE ONE FOOT (0.3M) AND FOR 42 - THROUGH 60 - INCH (1050 TO 1500MM) DIAMETERS, THE MINIMUM COVER SHALL BE 2 FT (0.6M). BACKFILL SHALL CONSIST OF CLASS I MATERIAL ONLY. MINIMUM COVER HEIGHTS DO NOT ACCOUNT FOR PIPE BUOYANCY. REFER TO ADS TECHNICAL NOTE *5.05 HDPE PIPE FLOTATION FOR BUOYANCY DESIGN CONSIDERATIONS*. MAXIMUM COVER OVER SYSTEM USING STANDARD BACKFILL IS 8-FT (2.4M); CONTACT A REPRESENTATIVE WHEN MAXIMUM FILL HEIGHT MAY BE EXCEEDED ADDITIONAL INSTALLATION REQUIREMENTS ARE PROVIDED IN THE DRAINAGE HANDBOOK SECTION 6 *RETENTION/DETENTION*.

NOTES:

1. ALL REFERENCES TO CLASS I OR II MATERIAL ARE PER ASTM D2321 "STANDARD PRACTICE FOR UNDERGROUND INSTALLATION OF THERMOPLASTIC PIPE FOR SEWERS AND OTHER GRAVITY FLOW APPLICATIONS", LATEST EDITION.

2. ALL RETENTION AND DETENTION SYSTEMS SHALL BE INSTALLED IN ACCORDANCE WITH ASTM D2321, LATEST EDITION AND THE MANUFACTURER'S PUBLISHED INSTALLATION GUIDELINES.

3. MEASURES SHOULD BE TAKEN TO PREVENT THE MIGRATION OF NATIVE FINES INTO THE BACKFILL MATERIAL, WHEN REQUIRED. SEE ASTM D2321.

4. FILTER FABRIC: A GEOTEXTILE FABRIC MAY BE USED AS SPECIFIED BY THE ENGINEER TO PREVENT THE MIGRATION OF FINES FROM THE NATIVE SOIL INTO THE SELECT BACKFILL MATERIAL.

5. FOUNDATION: WHERE THE TRENCH BOTTOM IS UNSTABLE, THE CONTRACTOR SHALL EXCAVATE TO A DEPTH REQUIRED BY THE ENGINEER AND REPLACE WITH SUITABLE MATERIAL AS SPECIFIED BY THE ENGINEER. AS AN ALTERNATIVE AND AT THE DISCRETION OF THE DESIGN ENGINEER, THE TRENCH BOTTOM MAY BE STABILIZED USING A GEOTEXTILE MATERIAL.
6. BEDDING: SUITABLE MATERIAL SHALL BE CLASS I OR II. THE CONTRACTOR SHALL PROVIDE DOCUMENTATION FOR MATERIAL SPECIFICATION TO ENGINEER. UNLESS OTHERWISE NOTED BY THE ENGINEER, MINIMUM BEDDING THICKNESS SHALL BE 4" (100mm) FOR 4"-24" (100mm-600mm); 6" (150mm) FOR 30"-60" (750mm-900mm).

7. INITIAL BACKFILL: SUITABLE MATERIAL SHALL BE CLASS I OR II IN THE PIPE ZONE EXTENDING NOT LESS THAN 6" ABOVE CROWN OF PIPE. THE CONTRACTOR SHALL PROVIDE DOCUMENTATION FOR MATERIAL SPECIFICATION TO ENGINEER. MATERIAL SHALL BE INSTALLED AS REQUIRED IN ASTM D2321, LATEST EDITION.

8. COVER: MINIMUM COVER OVER ALL RETENTION/DETENTION SYSTEMS IN NON-TRAFFIC APPLICATIONS (GRASS OR LANDSCAPE AREAS) IS 12" FROM TOP OF PIPE TO GROUND SURFACE. ADDITIONAL COVER MAY BE REQUIRED TO PREVENT FLOATATION. FOR TRAFFIC APPLICATIONS, MINIMUM COVER IS 12" UPTO 36" DIAMETER PIPE AND 24" OF COVER FOR 42" - 60" DIAMETER PIPE, MEASURED FROM TOP OF PIPE TO BOTTOM OF FLEXIBLE PAVEMENT OR TO TOP OF RIGID PAVEMENT. MAXIMUM FILL HEIGHT LIMITED TO 8-FT OVER FITTINGS FOR STANDARD INSTALLATIONS. CONTACT A SALES REPRESENTATIVE WHEN MAXIMUM FILL HEIGHTS EXCEED 8-FT FOR INSTALLATION CONSIDERATIONS.

NOTES:

1) ALL ELEVATIONS, DIMENSIONS AND LOCATIONS OF RISERS, INLETS AND OUTLETS, SHALL BE VERIFIED BY THE ENGINEER PRIOR TO RELEASING FOR FABRICATION.
2) IN SITUATIONS WHERE A FINE-GRAINED BACKFILL MATERIAL IS USED ADJACENT TO THE PIPE SYSTEM, AND ESPECIALLY INVOLVING GROUND WATER CONDITIONS, CONSIDERATION SHOULD BE GIVEN TO THE USE OF GASKETED PIPE JOINTS. AT THE VERY LEAST THE PIPE JOINTS SHOULD BE WRAPPED IN A SUITABLE, NON-WOVEN GEOTEXTILE FABRIC TO PREVENT INFILTRATION OF FINES INTO THE PIPE SYSTEM.
3) CONSIDERATION FOR CONSTRUCTION EQUIPMENT LOADS MUST BE TAKEN INTO ACCOUNT.
4) ALL PIPE DIMENSIONS ARE SUBJECT TO MANUFACTURERS TOLERANCES.
5) ALL RISERS TO BE FIELD EXTENDED OR TRIMMED TO FINAL GRADE.

THE PROCEEDING DETAILS WERE GENERATED USING ADS DESIGN PRO®, A SOFTWARE PROGRAM DEVELOPED BY ADVANCED DRAINAGE SYSTEMS, INC. ("ADS"). THESE DRAWINGS ARE INTENDED TO DEPICT THE ADS COMPONENTS AS REQUESTED BY THE USER. ADS HAS NOT PERFORMED ANY ENGINEERING OR DESIGN SERVICES FOR THIS PROJECT, NOR HAS ADS INDEPENDENTLY VERIFIED THE INFORMATION SUPPLIED. THE INSTALLATION DETAILS PROVIDED HEREIN ARE GENERAL RECOMMENDATIONS AND ARE NOT SPECIFIC FOR THIS PROJECT. THE DESIGN ENGINEER SHALL REVIEW THESE DETAILS PRIOR TO CONSTRUCTION. IT IS THE DESIGN ENGINEERS RESPONSIBILITY TO ENSURE THE DETAILS PROVIDED HEREIN MEETS OR EXCEEDS THE APPLICABLE NATIONAL, STATE, OR LOCAL REQUIREMENTS AND TO ENSURE THAT THE DETAILS PROVIDED HEREIN ARE ACCEPTABLE FOR THIS PROJECT.

THE UNDERSIGNED HERBY APPROVES THE ATTACHED ( ) PAGES.

DATE

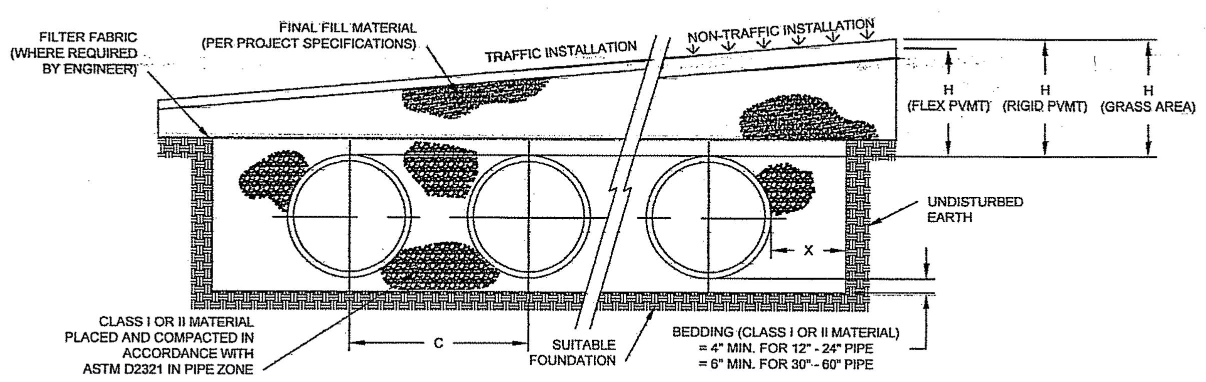

NOMINAL DIAMETER	NOMINAL O.D.	TYPICAL SPACING "C"	TYPICAL SIDE WALL "X"	MIN. H (NON-TRAFFIC)	MIN. H (TRAFFIC)	MAX. H*
36" (900 MM)	42" 1067 MM)	63" (1600 MM)	18" (457 MM)	12" (292 MM)	12" (292 MM)	8' (2.4 M)

* MAXIMUM FILL HEIGHTS OVER MANIFOLD FITTINGS. CONTACT MANUFACTURER'S REPRESENTATIVE FOR INSTALLATION CONSIDERATIONS WHEN COVER EXCEEDS 8-FT.
**60" SYSTEMS REQUIRE CLASS I BACKFILL AROUND ALL FITTINGS.

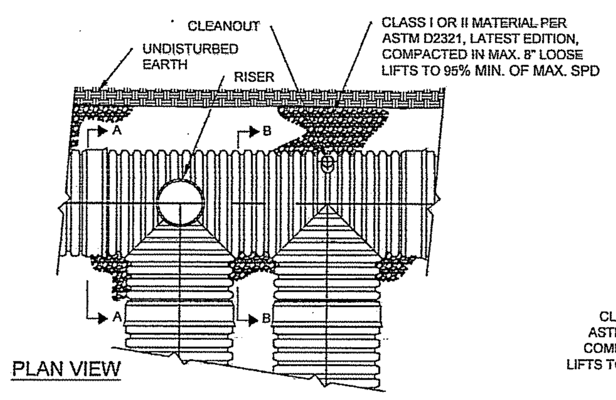

PLAN VIEW

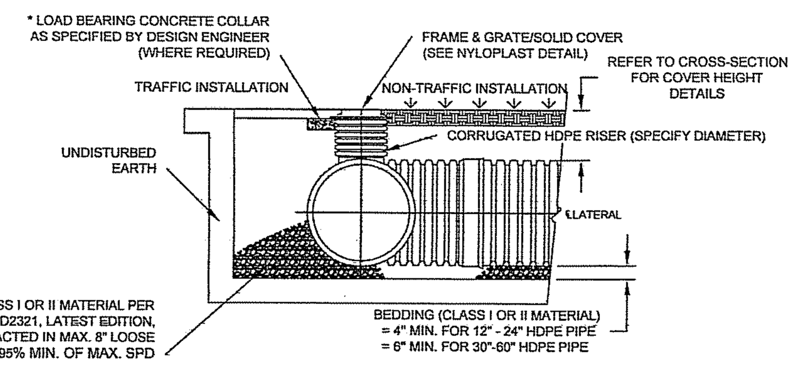

SECTION A-A

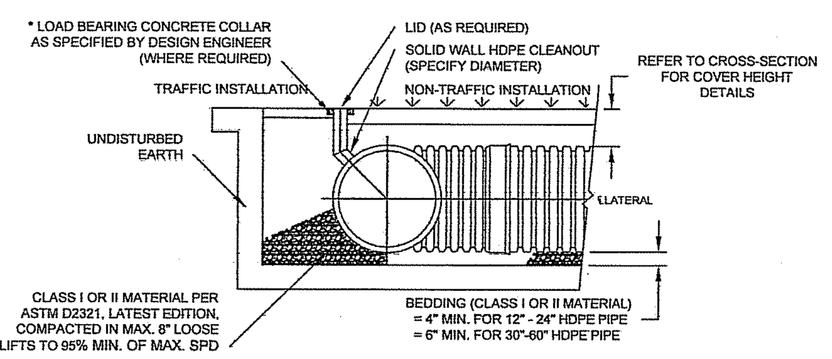

SECTION B-B

* LOAD BEARING CONCRETE COLLAR SHALL BE CONSTRUCTED IN TRAFFIC AREAS SUCH THAT THE LIVE LOAD IS TRANSMITTED TO THE SURROUNDING SOIL AND NOT DIRECTLY TO THE RISER.

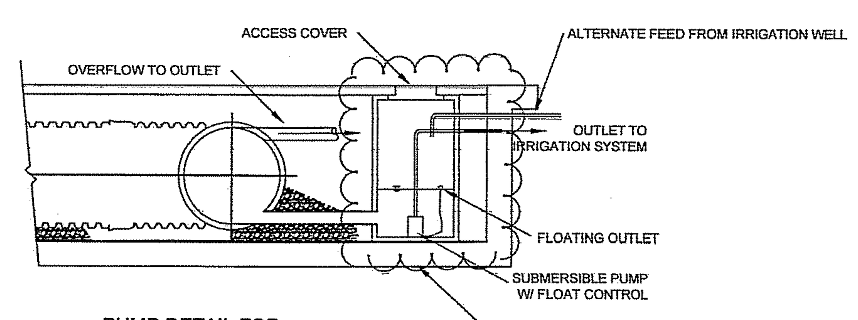

PUMP DETAIL FOR RAINWATER HARVESTING (BY OTHERS)

I.D.	SIZE, (in)	INV., (ft)	DOWNSTREAM I.D.	L. ft	S, %	DOWNSTREAM INV., (ft)
RWH#1	12	130.75	DMH-5	75	15.4	118.97
RWH#2	12	133	CB-6	46	4.50	130.87

PUTNAM COUNTY DEPARTMENT OF HEALTH
DIVISION OF ENVIRONMENTAL HEALTH SERVICES

These plans are hereby approved pursuant to Part 5 of the New York State Sanitary Code, Article 17 of the New York State Environmental Conservation Law and Article ____ of the Putnam County Sanitary Code, subject to the provisions of the Letter of Approval issued this date. See first sheet for signature.

Site Design Consultants
Civil Engineers • Land Planners
251-F Underhill Avenue, Yorktown Heights, NY 10598
(914) 962-4488 - Fax: (914) 962-7386
www.sitedesignconsultants.com

PROJECT # 14-25

Engineer:
Joseph C. Riina, P.E.
NYS Lic. No. 64431

Revisions:		
No.	Date	Comments:
1	12-3-14	Revisions per comments from B&L
2	1-9-15	Revisions per comments from B&L
3	2-10-15	Revisions per comments from B&L
4	2-19-15	Parking Schedule
5	3-13-15	Revisions per NYSDOT
6	3-23-15	Revisions per comments from B&L
7	4-23-15	Revisions per comments from PCDOH
8	4-27-15	Revisions per comments from PCDOH meeting

SCALE: NTS
DRAWN BY: EL
DATE: 10/22/14

RAIN WATER HARVESTING DETAILS

SITE/SUBDIVISION PLAN
PREPARED FOR
Butterfield Redevelopment Project
1756 NYS ROUTE 9D
Village Of Cold Spring
Putnam County, New York

Sheet
C-507

COPYRIGHT © 2012 BY SITE DESIGN CONSULTANTS, ALL RIGHTS RESERVED

F:\2014\14-25 BUTTERFIELD REDEVELOPMENT\ENGINEERING\CAD\C3D-14-25 BUTTERFIELD REDEVELOPMENT\14-25 DETAILS UPDATED.DWG

NOTE: UNAUTHORIZED ALTERATIONS OR ADDITIONS TO THIS DRAWING IS A VIOLATION OF SECTION 7209.(2) OF THE NEW YORK STATE EDUCATION LAW.